SONY

DAT DUAL DECK EDITOR

PCM-E7700

DATStation

OPERATION AND MAINTENANCE MANUAL

For the customers in the U.S.A.

WARNING

This equipment has been tested and found to comply with the limits for a Class A digital device, pursuant to Part 15 of the FCC Rules. These limits are designed to provide reasonable protection against harmful interference when the equipment is operated in a commercial environment. This equipment generates, uses, and can radiate radio frequency energy and, if not installed and used in accordance with the instruction manual, may cause harmful interference to radio communications. Operation of this equipment in a residential area is likely to cause harmful interference in which case the user will be required to correct the interference at his own expense.

You are cautioned that any changes or modifications not expressly approved in this manual could void your authority to operate this equipment.

The shielded interface cable recommended in this manual must be used with this equipment in order to comply with the limits for a digital device pursuant to Subpart B of Part 15 of FCC rules.

This symbol is intended to alert the user to the presence of important operating and maintenance (servicing) instructions in the literature accompanying the appliance.

WARNING: Using this unit at a voltage other than 120 V may require the use of a different line cord or attachment plug, or both.
To reduce the risk of fire or electric shock, refer servicing to qualified service personnel.

For the customers in Canada
This apparatus complies with the Class A limits for radio noise emissions set out in radio interference regulations.

Pour les utilisateurs au Canada
Cet appareil est conforme aux normes Classe A, pour bruits radioélectriques, spécifiés dans le Règlement sur le brouillage radioélectrique.

Bescheinigung des Herstellers
Hiermit wird bescheinigt, daß die DAT-Doppel-Fernbedieneinheit PCM-E7700 in Übereinstimmung mit den Bestimmungen der BMPT-Amtsblatt Vfg 243/1991 und Vfg 46/1992 funkenstört ist. Der vorschriftsmäßige Betrieb mancher Geräte (z.B.Meßsender) kann allerdings gewissen Einschränkungen unterliegen. Beachten Sie deshalb die Hinweise in der Bedienungsanleitung. Dem Bundesamt für Zulassungen in der Telekommunikation wurde das inverkehrbringen dieses Gerätes angezeigt und die Berechtigung zur Überprüfung der Serie auf Einhaltung der Bestmmungen eingeräumt.

Sony Deutschland GmbH
Hugo Eckener Str 20
50829 Köln

Hinweis
Gemäß der Amtsblätter des BMPT Nm. 61/1991 und 6/1992 wird der Betreiber darauf aufmerksam gemacht, daß die von ihm mit diesem Gerät zusammengestellte Anlage auch den technischen Bestimmungen dieser Amtsblätter genügen muß.

このマニュアルについて

本書の目的

本書は、PCM-E7700のオペレーション　アンド　メンテナンスマニュアル　パート2です。

本書は、サービスエンジニアの方々にご使用いただくことを想定し、これらの機種の部品レベルまでのサービスを前提とした情報(回路図、マウント図、詳細パーツリスト等)を記載しています。

構成

本書の構成を把握していただくために、全章の概略を以下に説明します。

オペレーション　アンド　メンテナンスマニュアル　パート2

第1章　サービスインフォメーション
電源ヒューズの交換、補修用部品注意事項について説明しています。

第2章　メカデッキの交換および調整
メカデッキAssyおよびメカデッキ部品(定期交換部品)の交換方法、調整方法について記載しています。

第3章　電気調整
ADA-31基板を交換した際に必要な調整について記載しています。

SECTION 4　BOARD LAYOUTS
マウント図、部品の基板アドレスを記載しています。

SECTION 5　SCHAMATIC DIAGRAMS
回路図を記載しています。

SECTION 6　SEMICONDUCTOR PIN ASSIGNMENTS
使用半導体の標準図を記載しています。

SECTION 7　SPARE PARTS
分解図・メカ部品表、電気部品表を記載しています。

オペレーション　アンド　メンテナンスマニュアル　パート1(PCM-E7700に付属しています)
第1章 取り扱い操作
第2章 設置
第3章 サービスインフォメーション
第4章 定期点検及び保守
SECTION 5　BLOCK DIAGRAMS, DESCRIPTION AND FRAME WIRING
SECTION 6　SPARE PARTS

MANUAL STRUCTURE

Purpose of This Manual

This manual is PCM-E7700 Maintenance Manual Part 2.

This manual describes the information items (adjustments, board layouts, schematic diagrams, detailed parts list, etc.) that premise the service based on parts.
If this manual is required, please contact to Sony's service organization.

Contents

The following are a summary of all the sections for understanding the contents of this manual.

Operation and Maintenance Manual Part 2

SECTION 1. SERVICE OVERVIEW
Describes power fuse replacement and precautions for repair parts.

SECTION 2. REPLACEMENT AND ALIGNMENTS OF MECHANICAL DECK
Describes how to replace the assembly and the parts of the mechanical deck that should be replaced periodically and how to adjust them.

SECTION 3. ELECTRICAL ALIGNMENTS
Describes adjustments required when ADA-31 board is replaced.

SECTION 4. BOARD LAYOUTS
Printed circuit pattern of circuit boards and their printed symbols are shown in the almost same order of schematic diagrams.

SECTION 5. SCHEMATIC DIAGRAMS
Contains schematic diagrams of printed circuit board.

SECTION 6. SEMICONDUCTOR PIN ASSIGNMENTS
Contains pin assignment diagrams of semiconductors used.

SECTION 7. SPARE PARTS
Contains exploded views, mechanical parts list, and electrical parts list.

Operation and Maintenance Manual Part 1 (Supplied with PCM-E7700)
SECTION 1. OPERATIONS
SECTION 2. INSTALLATION
SECTION 3. SERVICE INFORMATION
SECTION 4. PERIODICAL INSPECTION AND MAINTENANCE
SECTION 5. BLOCK DIAGRAMS, DESCRIPTION AND FRAME WIRING
SECTION 6. SPARE PARTS

目次
TABLE OF CONTENTS

1. サービスインフォメーション

1-1. DCファンモータの交換 ..... 1-1(J)
1-2. SSP-8基板に関するサービス情報 ..... 1-2(J)
1-2-1. SSP-8基板上の動作確認用LEDについて ..... 1-2(J)
1-2-2. リチウム電池(CR-2450)の交換 ..... 1-2(J)
1-3. SV-147基板上のスイッチ設定／LEDの機能 ..... 1-3(J)
1-4. 補修用部品注意事項 ..... 1-4(J)
1-4-1. 補修用部品注意事項 ..... 1-4(J)
1-4-2. チップ部品の交換方法 ..... 1-4(J)
1-4-3. PLCC ICの取外し方法 ..... 1-5(J)

2. メカデッキの交換及び調整

2-1. メカデッキASSY及びメカデッキ部品(定期交換部品)の交換 ..... 2-1(J)
2-2. 調整及び確認 ..... 2-3(J)
2-2-1. 準備 ..... 2-5(J)
2-2-2. サービスメニューでの調整及び確認 ..... 2-7(J)
2-2-3. SV-147基板交換時の確認 ..... 2-28(J)

3. 電気調整

3-1. A/D, D/A系調整(ADA-31基板) ..... 3-1(J)
3-1-1. A/D変換レベル調整 ..... 3-2(J)
3-1-2. D/A変換レベル調整 ..... 3-3(J)

4. BOARD LAYOUTS

ADA-31 BOARD 4-3
SSP-8 BOARD 4-4
SV-147 BOARD 4-6
RF-53 BOARD 4-7
CP-233A/233B BOARD 4-7
CP-234 BOARD 4-7
HP-57 BOARD 4-8
KY-247 BOARD 4-8
LED-160 BOARD 4-8
VR-154 BOARD 4-8
VR-181 BOARD 4-8

1. SERVICE OVERVIEW

1-1. REPLACEMENT OF DC FAN MOTOR ..... 1-1(E)
1-2. SERVICE INFORMATION ON SSP-8 BOARD ..... 1-2(E)
1-2-1. LEDs for Checking Operations on SSP-8 Board ..... 1-2(E)
1-2-2. Replacement of Lithium Battery (CR-2450) ..... 1-2(E)
1-3. SWITCH SETTING/LED FUNCTION ON SV-147 BOARD ..... 1-3(E)
1-4. NOTES ON REPAIR PARTS ..... 1-4(E)
1-4-1. Notes on Repair Parts ..... 1-4(E)
1-4-2. Replacement Procedure for Chip Parts ..... 1-4(E)
1-4-3. Removal of PLCC IC ..... 1-5(E)

2. REPLACEMENT AND ALIGNMENT MECHA DECK

2-1. REPLACEMENT OF MECHANICAL DECK ASSY AND PERIODIC REPLACEMENT PARTS ..... 2-1(E)
2-2. ALIGNMENT AND CHECK ..... 2-3(E)
2-2-1. Preparation ..... 2-5(E)
2-2-2. Alignment and Check on Service Menu ..... 2-7(E)
2-2-3. Check of SV-147 Board Replacement ... 2-28(E)

3. ELECTRICAL ALIGNMENT

3-1. A/D, D/A Adjustments (ADA-31 Board) ..... 3-1(E)
3-1-1. A/D Conversion Level Adjustment ..... 3-2(E)
3-1-2. D/A Conversion Level Adjustment ..... 3-3(E)

5. SCHEMATIC DIAGRAMS

ADA-31 BOARD 5-2
SSP-8 BOARD 5-4
RF-53 BOARD 5-12
SV-147 BOARD 5-13
FRAME WIRING 5-14

6. SEMICONDUCTOR PIN ASSIGNMENTS

7. SPARE PARTS

7-1. NOTES ON SPARE PARTS 7-1
7-2. EXPLODED VIEWS AND PARTS 7-2
7-3. ELECTRICAL PARTS LIST 7-10
7-4. ACCESSORIES SUPPLIED 7-21

第1章
サービスインフォメーション

1-1. DCファンモータの交換

注意：電源スイッチをOFFにし、電源コードを抜いておく。

手順

(1) ネジ5本(PWH3×6)を外し、底板ASSYを取り外す。
次にネジ5本(PWH3×5)を外しておく。

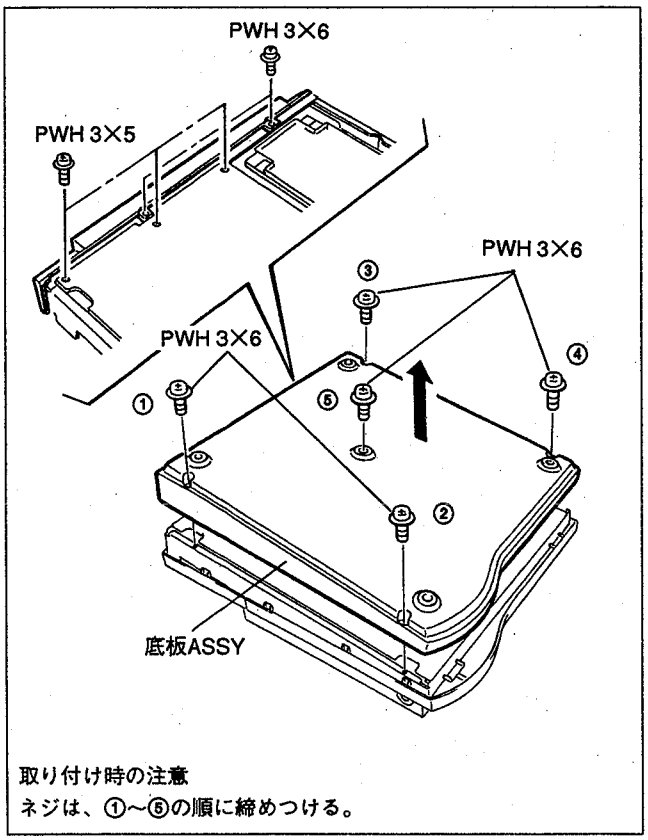

取り付け時の注意
ネジは、①～⑤の順に締めつける。

(2) ネジ3本(PWH3×6)を外し、天板を後方にスライドさせてから、上へ取り外す。

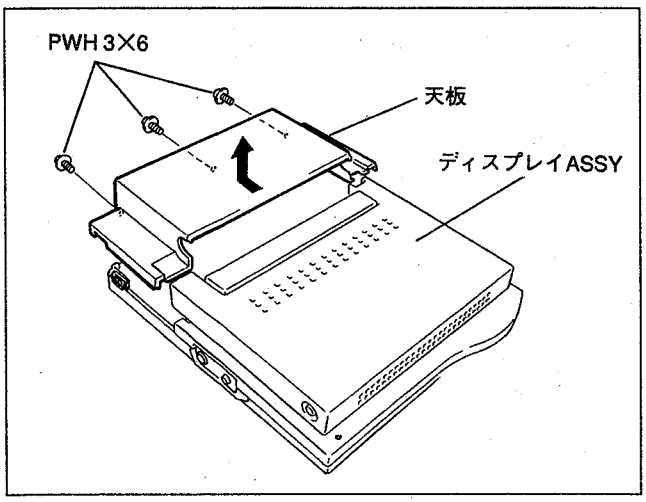

(3) ネジ2本(PWH3×5)と天板アース板を取り外す。
ツメ2ヶ所を外し、リアパネルを取り外す。

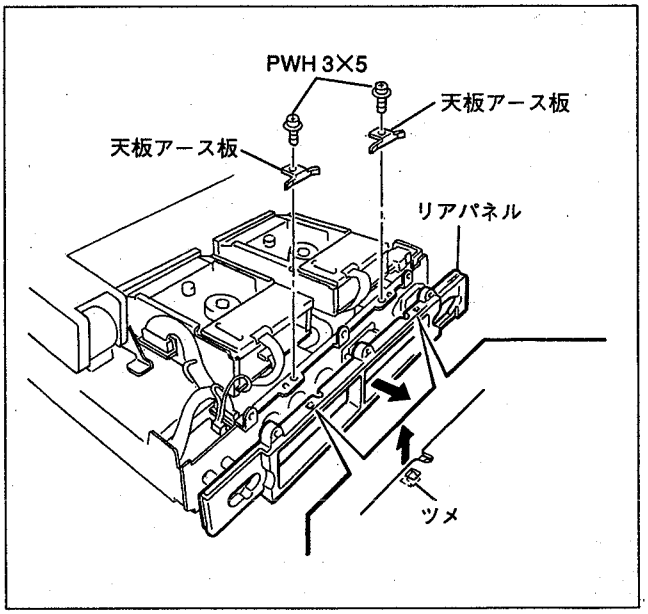

(4) CN1/CP-234基板を外し、ネジ5本(PWH3×5、PS4×8)を外し、リアシャーシを引き出す。
コネクタCN706/SSP-8基板からハーネスを外し、ネジ4本(B3×20)を外す。
DCファンモータを取り外し、新しいファンモータと交換する。

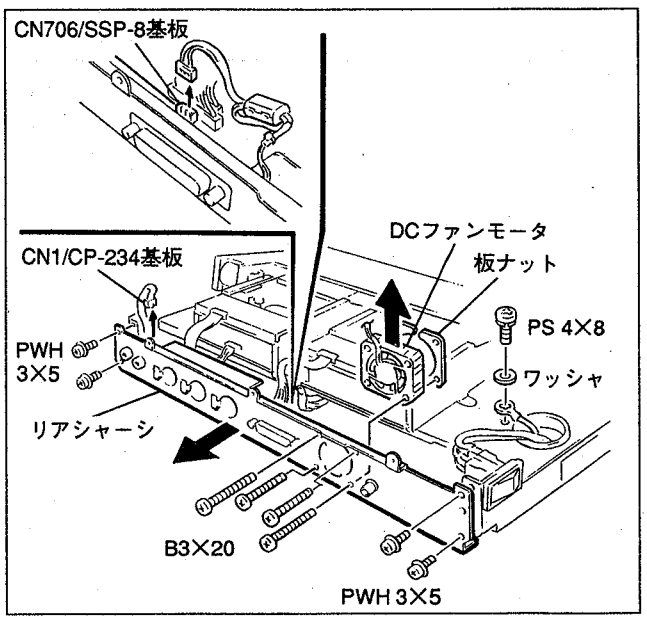

1-2. SSP-8基板に関するサービス情報

1-2-1. SSP-8基板上の動作確認用LEDについて

SSP-8基板上には、動作確認用として下記のLEDがある。各LEDの働きは次のようになっている。

D106(RED): I/O CPU(IC103)が不良の時点灯
(通常動作時；消灯)

D107(RED): GDC(IC125)が不良の時点灯
(通常動作時；消灯)

D108(YELLOW): EEROM(IC115)のアクセス中点灯

D109(GREEN): I/O CPUブロックが正常動作している時点滅
(約0.2s間隔)

ND301: PLAYER CPUブロックが正常動作していない時、表示が静止(止まる)

ND501: RECORDER CPUブロックが正常動作していない時、表示が静止(止まる)

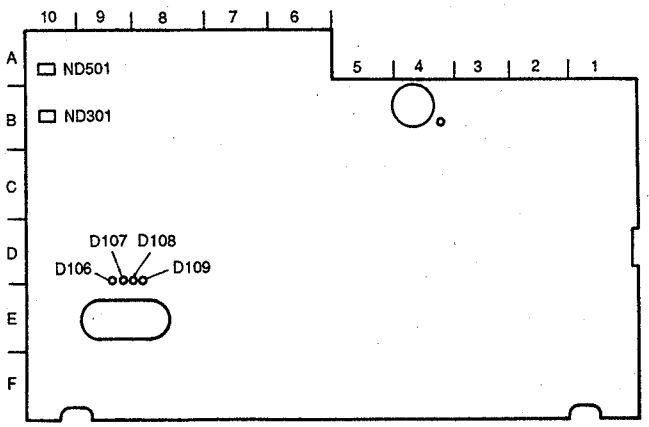

SSP-8 Board
(部品面側)

1-2-2. リチウム電池(CR-2450)の交換

SSP-8基板上にあるバッテリーバックアップ用リチウム電池(CR-2450)の寿命は、メッセージとして表示されない。したがって、オペレーション時間等を目安に交換する。
標準交換サイクル；約3年
交換は以下の手順で行う。

部品名
リチウム電池(CR-2450)；1 (部品番号: 1-528-229-11)

動作説明

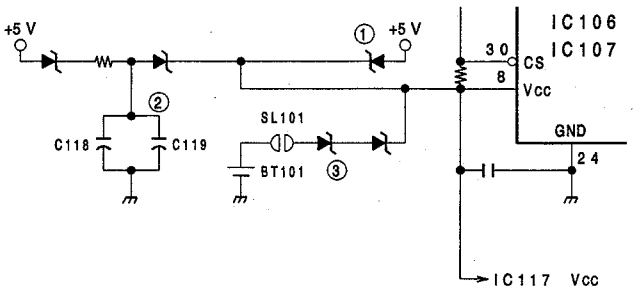

上記回路において、IC106、107、117は3系統の電源より、Vccの+5V、CSのPULL UP抵抗の+5Vを供給されるようになっている。
すなわち、
①本体電源
②本体電源によってチャージされたC118、C119からの+5V
③BT101からの+3V
である。

・本体動作中は①よりの供給、そして②の充電が行われる。
・本体をOFFにすると②からの供給が行われる。
・②が放電しつくすと、③からの供給が行われる。
これらの方法で、IC106、107のSRAMのデータおよびIC117の時計動作のバックアップが行われる。

交換手順

(1) PCM-E7700本体の電源(POWER)スイッチをONにして、10分以上通電しておく。
(2) 電源(POWER)スイッチをOFFにする。
(3) SSP-8基板を本体より外す。
外し方については、MAINTENANCE MANUAL Part1の"2章外装の取り外し"および"Section6 6-2. EXPLODED VIEWS AND PARTS"を参考にして行う。
(4) 基板の部品面側にあるスリットランド(SL101)のはんだをとる。
(5) リチウム電池(BT101)をSSP-8基板より外す。
(6) 新しいリチウム電池(CR-2450)をSSP-8基板に取り付ける。
(7) スリットランド(SL101)をはんだ付け(はんだブリッジ)する。

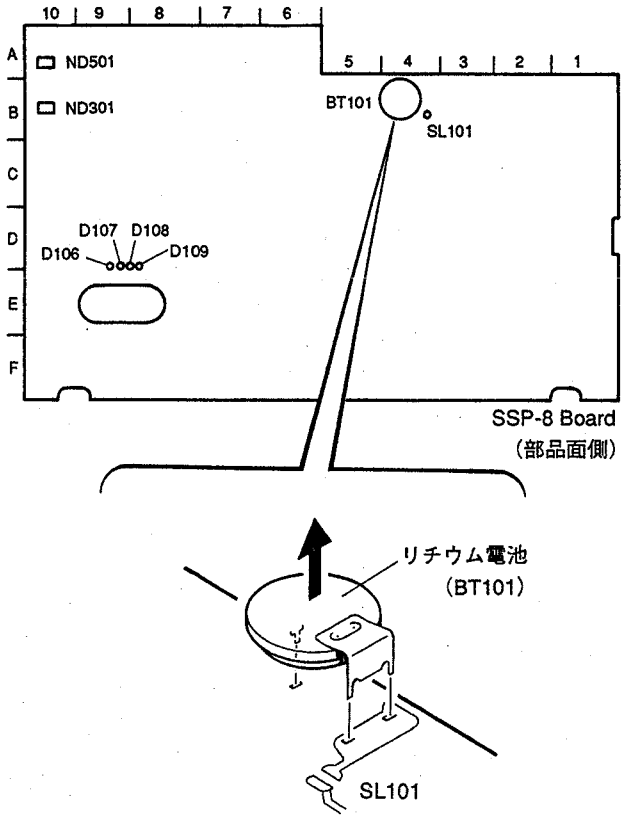

(8) SSP-8基板を本体に取り付ける。
(9) 電源(POWER)スイッチをONにする。
(10) エラーメッセージが表示されずに起動することを確認する。

注意事項：

・交換を行う際、IC106、107、117の足などをショートするとSRAMおよび時計の内容が破壊されるので注意して行う。
・新しい電池の電圧が2.6V以上あることを確認してから交換する。

1-3. SV-147基板上のスイッチ設定／LEDの機能

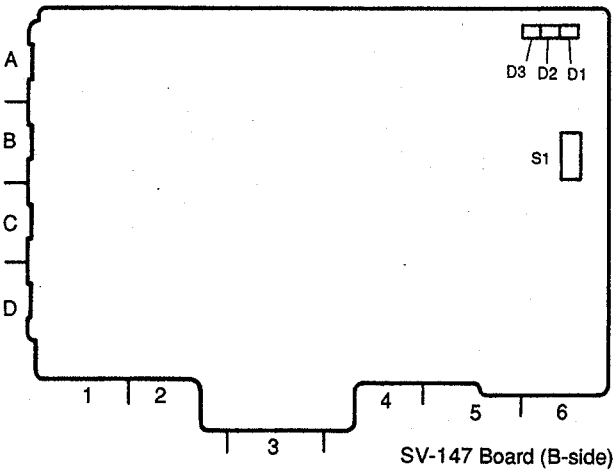

スイッチ

S1(S1-1 to S1-4)；調整モード設定スイッチ
(詳細は"第2章メカデッキの交換および調整"参照)

工場出荷時の設定
S1-1 to S1-4；すべてOFF
(通常動作時の設定)

LED

D1；CPU 動作表示
点滅(約1秒間隔) ..... 正常時
早い点滅(約0.5秒間隔) ... 異常検出時
点灯または消灯 ..... CPU停止時

D2；調整モード表示
点灯 ..... 調整モードON
消灯 ..... 調整モードOFF

D3；サーボlock表示
点灯 ..... lock
消灯 ..... unlock

1-4. 補修用部品注意事項

1-4-1. 補修用部品注意事項

(1) 安全重要部品
回路図、分解図、電気部品表中で⚠印付きの部品は、安全性を維持するために重要な部品である。従ってこれらの部品を交換する時には、必ず指定の部品と交換すること。

(2) 部品の共通化
ソニーから供給される部品はセットに実装されているものと異なることがある。
これは部品の共通化、改良等によるものである。
分解図や電気部品表には現時点での共通化された部品が記載されている。

(3) 部品の変更
部品の変更に関する情報は「CHANGED PARTS」を参照すること。

(4) 部品の在庫
部品表のSP(Supply code)欄にoで示される部品は交換頻度が低い部品で、在庫していないことがあり、納期が長くなることがある。

(5) コンデンサ、抵抗の単位
回路図、分解図、電気部品表中、特に明記したものを除き、下記の単位は省略されていることがある。
コンデンサ：μF
抵抗　　：Ω

1-4-2. チップ部品の交換方法

用意する工具

はんだコテ　：20W程度。できれば、コテの温度を270±10°Cにコントロールできる温度コントローラを使用すること。
編組線　　：SOLDER TAUL または同等品
　　ソニー部品番号　7-641-300-81
はんだ　　：直径0.6mmが望ましい。
ピンセット

はんだ付条件

コテ温度　：270±10°C
はんだ付時間：一端子について2秒以内にする。

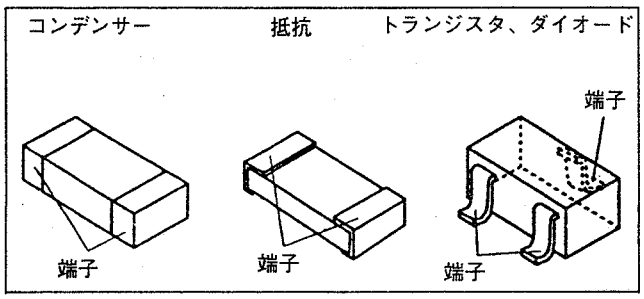

・抵抗、コンデンサの交換

(1) はんだコテの先をチップ部品の上にのせてチップ部品を加熱し、はんだが溶けた状態で横にずらす。
(2) 取り外した部分のパターンはがれ、隣接はんだ付部のダメージ、ブリッジなどがないことを確認する。
(3) パターンにうすく予備をはんだする。
(4) 新しいチップ部品をパターンにのせ、両端をはんだ付けする。

注意：取り外したチップ部分は再び使わないこと。

・トランジスタ、ダイオードの交換

(1) ニッパにて部品の端子を切断する。
(2) 切断した端子をはんだコテで取り除く。
(3) 取り除いた部品のパターンはがれ、隣接はんだ付部のダメージ、ブリッジなどがないことを確認する。
(4) パターンにうすく予備はんだをする。
(5) 新しいチップ部品をパターンにのせ、端子をはんだ付けする。

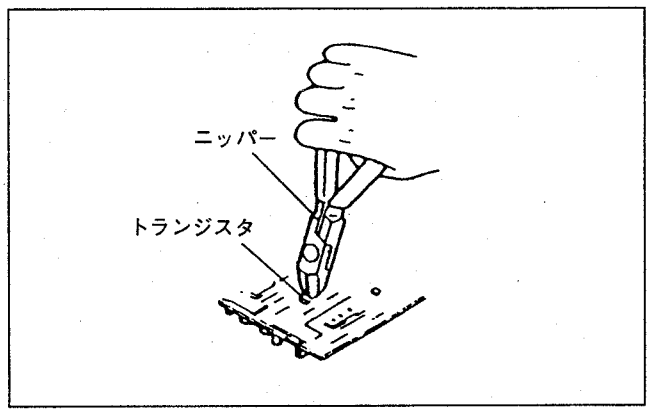

・ICの交換

(1) 編組線を使って端子のはんだを取り除く。
(2) はんだコテで加熱しながら、ピンセットなどを使って端子を一本づつパターンから外し、ICを取り除く。
(3) 取り除いた部分のパターンはがれ、隣接はんだ付部のダメージ、ブリッジなどがないことを確認する。
(4) パターンにうすく予備はんだをする。
(5) 新しいチップ部品をパターンにのせ、端子をはんだ付けする。

1-4-3. PLCC ICの取り外し方法

ICソケットに差し込まれたPLCCタイプのICを取り外す場合は、下記の工具を使用することを推奨します。20～124ピンまでのピン数のICに利用できます。

PLCCソケット用引き抜き工具
　ソニー部品番号J-6035-070-A

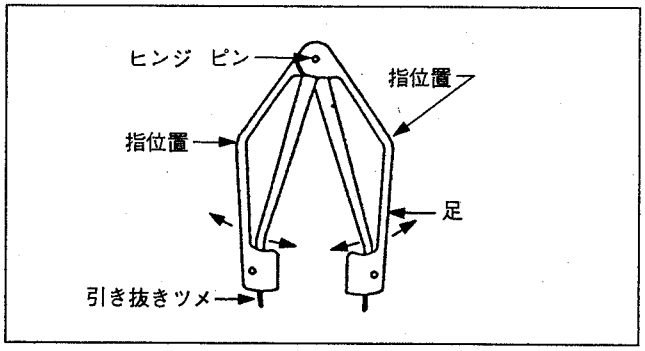

注意：・引き抜き工具でICチップを上方に引っ張らないこと。
　　・必要以上の力で工具をはさみ込まないこと。

1. 工具の足をソケットのスロットの長さに合わせます。

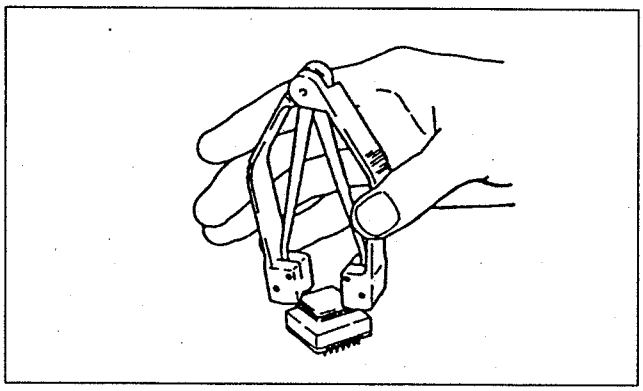

2. 工具の先端の引き抜きツメをICソケットのスロットに差し込み、引き抜き工具の図に示すAの部分がソケットにあたるまで押し込みます。

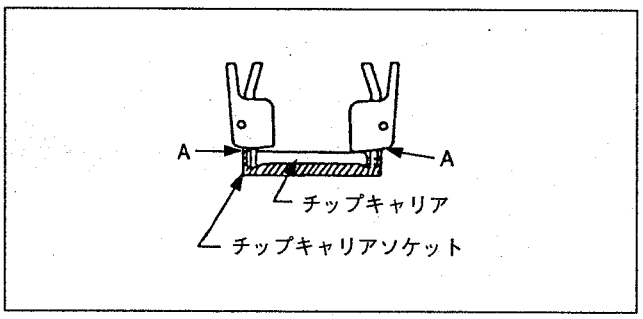

3. 図のように引き抜き工具のリブの部分を持ちます。ソケットには下方向に小さな力がかかります。

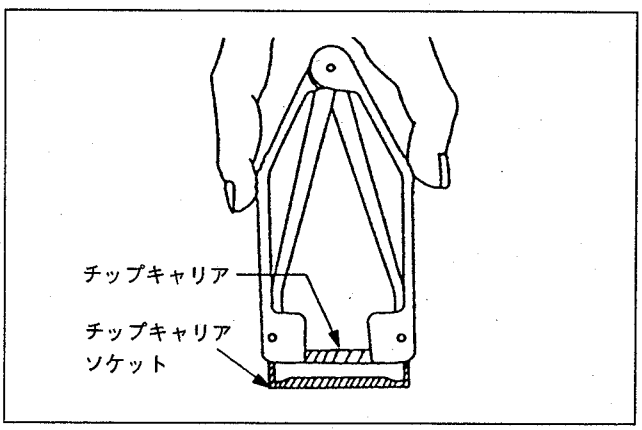

4. 引き抜き工具をはさみ込みます。これにより、工具の足が伸びると同時に、工具の先端のツメがICチップをつかみ、上方向に引き抜きます。
5. 引き抜いた後、力をゆるめ、ICチップを引き抜き工具から外します。

2-2. 調整および確認

メカデッキASSYおよびメカデッキ部品(定期交換部品)を交換後、表Aに従って調整および確認を行う。
調整および確認は、本機に内蔵のサービスメニューを使用して、メカデッキASSYを本体に取り付けて行う。

サービスメニューの入り方

(1) SV-147基板のBITスイッチ(S1)を以下のように設定する。

S1/SV-147基板の設定
S1-3； ON
S1-1、-2、-4； OFF

(2) POWERスイッチをONにする。
(3) SHIFTキー＋MODEキーを同時(2重押し)に押す。
(サービスメニューの設定)

ELディスプレイ画面表示

```
SERVICE MENU

1  PLAYER MECHANICAL DECK ADJUSTMENT
2  RECORDER MECHANICAL DECK ADJUSTMENT
3  TEST
4  INFORMATION

P-MD     R-MD     TEST     INFORM
```

F 1　F 2　F 3　F 4　F 5　F 6　F 7

注意：F1～F7；ファンクションキー

(4) PLAYERメカデッキを調整する場合；
F1 (P-MD)キーを押す。
RECORDERメカデッキを調整する場合；
F2 (R-MD)キーを押す。

ELディスプレイ画面表示
(注意：画面は、RECORDER ADJUSTMENTの場合)

```
RECORDER ADJUSTMENT
                                          SERVO BOARD BIT SW
▷1  SERVO DATA PRESET
 2  PLUNGER CHECK                         BIT1  OFF MAN EJECT
 3  MECHA DEVICE TEST                     BIT2  OFF EEPROM EN
 4  RECOGNITION SWITCH CHECK              BIT3  ON  ERROR CUT
 5  END SENSOR LEVEL CHECK(HIGH)          BIT4  OFF ---------
 6  END SENSOR LEVEL CHECK(LOW)
 7  DEW SENSOR CHECK
 8  REEL TORQUE CHECK                        *
 9  FWD/RVS TORQUE ADJUSTMENT
10  DRAM/CAPSTAN SPEED & WOW CHECK

      MESSAGE

RECORDER: STOP
-------------------------------------------------------------
TEST ON   EXIT
```

F 1　F 2　F 3　F 4　F 5　F 6　F 7

*：SERVICE MENU時のモード設定操作キー表示

操作キー	モード
[SHUTTLE]:	STILL
[PREVIOUS]:	SHUTTLE－16
[NEXT]:	SHUTTLE＋16
[PGM SEARCH]:	SHUTTLE－1
[LOCATE]:	SHUTTLE＋1
[1]:	SHUTTLE－8
[2]:	SHUTTLE＋8
[4]:	SHUTTLE－2
[5]:	SHUTTLE＋2
[7]:	SHUTTLE－0.2
[8]:	SHUTTLE+0.2

(5) ↑、↓キーを使用して、表Aに従って必要な調整項目を選択し(カーソル"▷"で選択)、
"2-2-2. サービスメニューでの調整および確認"を行う。

サービスメニューの抜け方(通常動作への復帰)

調整終了後、サービスメニューから通常動作モードへの復帰は以下のように行う。

(1) SV-147基板のBITスイッチ(S1)を以下のように設定する。
S1-1、-2、-3、-4；すべてOFF
(2) 本体のPOWERスイッチをOFFにする。
(3) 本体のPOWERスイッチをONにする。

表A: 調整項目一覧

メカデッキASSYおよびメカデッキ部品(定期交換部品)を交換した際、表中の○印の項目が必要な調整項目。

交換部品 / 調整項目（サービスモード）	ﾒｶﾃﾞｯｷ組立	ﾄﾞﾗﾑ ASSY	ｷｬﾋﾟｽﾀﾝ ASSY	ﾄﾞﾗｲﾌﾞﾓｰﾀｰ ASSY	DCﾓｰﾀｰ ｷｬﾌﾟｽﾀﾝ	ﾘｰﾙ ﾓｰﾀｰ	ﾋﾟﾝﾁ ﾛｰﾗｰ ASSY	ﾛｰﾀﾘｰ ｴﾝｺｰﾀﾞｰ	HC ﾛｰﾗｰ	その他	
										SV-147 ASSY (RP)	RF-53 ASSY (RP)
1. SERVO DATA PRESET											
2. PLUNGER CHECK						○					
3. MECHANICAL DEVICE TEST		○	○	○	○	○	○	○	○	○	
4. RECOGNITION SWITCH CHECK							○	○			
5. END SENSOR LEVEL CHECK (HIGH)			○							○	
6. END SENSOR LEVEL CHECK (LOW)			○							○	
7. DEW SENSOR CHECK											
8. REEL TORQUE CHECK						○					
9. FWD/REV TORQUE ADJUSTMENT						○				○	
10. DRUM/CAPSTAN SPEED & WOW CHECK		○									
11. TAPE PATH ADJUSTMENT		○			○	○	○				
12. SWP POSITION ADJUSTMENT		○								○	
13. PATH & FF/REW TIME CHECK		○			○	○	○				
14. PB ERROR RATE CHECK	○	○			○	○	○			○	○
15. REC CURRENT ADJUSTMENT (LEADING)		○								○	○
16. REC CURRENT ADJUSTMENT (TRAILING)		○								○	○
17. REC/PB ERROR RATE CHECK	○	○								○	○
18. SERVO DATA SAVE		○				○				○	○
19. SERVO DATA DISPLAY											
2-2-3. SV-147基板交換時の確認										○	

2-2-1. 準備

使用機器

名称	仕様	機器名
オシロスコープ	・4CH INPUT ・DC to 150MHz	TEKTRONIX 2445Aまたは相当品
デジタルマルチメーター(テスター)	—	アドバンテストR6341Aまたは相当品

治工具

名称	部品番号	備考
調整ドライバー	J-6225-100-A	テープパス微調整用
RF LEVEL CHECKER PD-817	J-6228-170-A	記録再生系調整用
RF LEVEL CHECKER用 I/Fボックス PF-534	J-6405-340-A	PCM-E7700用

テストテープおよびトルクカセット

名称	部品番号	備考
テストテープ TY-7111DX	8-909-825-00	再生レベル確認用
テストテープ TY-7251	8-909-813-00	トラッキング調整用
テストテープ TY-30BX	8-892-332-38	記録レベル調整用(ブランクテープ)
テストテープ TY-7212	8-960-081-01	エラーレート確認用
トルクカセット TW-7131	8-909-708-71	FWD/REVトルク調整用
トルクカセット TW-7231	8-909-708-72	FF/REWトルク確認用

以下のテストテープは、市販のテープを表に従って使用する。

名称	使用方法
空カセット	テープなし(市販のカセットテープを改造)
テストテープ(01010)	空カセットでカセット識別穴(孔)が以下のテープ(市販のDATテープを改造) 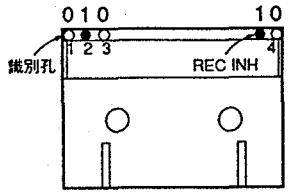 ○: OPEN ●: CLOSE
テストテープ(10101)	空カセットでカセット識別穴(孔)が以下のテープ(市販のDATテープを改造) 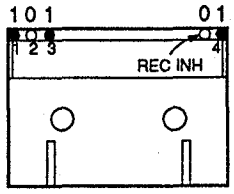 ○: OPEN ●: CLOSE
テストテープ(エンドセンサーLOW)	市販の120分テープ(テープ中央付近で使用)
テストテープ(TOP)	市販の120分テープ(テープTOP付近で使用)
テストテープ(END)	市販の120分テープ(テープEND付近で使用)
テストテープ(FF/REW TIME)	市販の30分テープ(テープ全長記録済みで使用)

2-2-2. サービスメニューでの調整および確認

1. SERVO DATA PRESET(1. サーボデータプリセット)

通常、メカデッキ部品(定期交換部品)を交換した際は、この調整および確認は行う必要はない。

注意：誤ってサーボデータープリセットを行った場合は、本機のPOWERスイッチをOFFにし、再度ONにする。

使用機器、治工具；使用せず
使用テストテープ；使用せず

手順	確認
(1) ↑、↓キーで"1. SERVO DATA PRESET"を選択する。 (2) F1 (TEST ON)キーを押す。 (3) ELディスプレイ画面にMESSAGE : PRESETTING IS COMPLETED!が表示される。 (4) 表示後、F1 (TEST OFF)キーを押す。(プリセット終了) **注意：**F1 キーを1回押すとTEST ONの状態からTEST OFF(画面表示)へと切り換わる。	ELディスプレイ画面 **注意：**画面に表示されるプリセット値は、ROMのバージョンによって異なることがある。

```
RECORDER ADJUSTMENT          1. SERVO DATA PRESET

SWP POSITION = 117 (75H) EQ-L-X1 = 64 (40H) REC-L-PCMA1 = 217 (D9H)
                         EQ-H-X1 = 66 (42H) REC-L-PCMB1 = 217 (D9H)
FWD TORQ T   =  14 (0EH) EQ-Q-X1 = 59 (3BH) REC-L-ATFA1 =  16 (10H)
FWD TORQ S   = 128 (80H) EQ-P-X1 = 44 (2CH) REC-L-ATFB1 =  16 (10H)
REV TORQ T   =  65 (41H)
REV TORQ S   = 138 (84H) EQ-L-X2 = 21 (15H) REC-T-PCMA1 = 217 (D9H)
OFFSET TORQ  =  56 (38H) EQ-H-X2 = 44 (2CH) REC-T-PCMB1 = 217 (D9H)
                         EQ-Q-X2 = 37 (25H) REC-T-ATFA1 =  16 (10H)
END T HIGH   = 128 (80H) EQ-P-X2 = 21 (15H) REC-T-ATFB1 =  16 (10H)
END S HIGH   = 128 (80H)
END T LOW    =  00 (00H)
END S LOW    =  00 (00H)

      MESSEAGE
          PRESETTING IS COMPLETED!

RECODER: NO TAPE
-------------------------------------------------------------------
TEST OFF
  F1      F2      F3      F4      F5      F6      F7
```

2. PLUNGER CHECK(2. プランジャー回路動作確認)

使用機器、治工具；使用せず
使用テストテープ；使用せず

手順	確認
(1) ↑、↓キーで"2. PLUNGER CHECK"を選択する。 (2) F1 (TEST ON) キーを押す。 (3) プランジャーが動作する音を確認する。また、ELディスプレイ画面の結果表示を確認する。 (4) F1 キーを押す。	ELディスプレイ画面 RECORDER ADJUSTMENT　　2. PLUNGER CHECK PLUNGER KICK　　PASS PLUNGER RELEASE　　PASS RECODER: NO TAPE TEST OFF F1　F2　F3　F4　F5　F6　F7 結果表示：PASS …正常 FAULT…異常

3. MECHANICAL DEVICE TEST(3. メカデバイステスト)

使用機器、治工具；使用せず
使用テストテープ；空カセット("2-2-1. 準備"参照)

手順	確認
(1) ↑、↓キーで"3. MECHA DEVICE TEST"を選択する。 (2) F1 (TEST ON) キーを押す。 (3) 空カセットを挿入する。 メカデバイステストが実行され、テスト結果が画面に表示される。表示後、空カセットが自動的にイジェクトされる。 (4) 表示を確認後、F1 キー(TEST OFF)を押す。	ELディスプレイ画面 RECORDER ADJUSTMENT　　3. MECHANICAL DEVICE TEST CASSETTE UP SWITCH　　PASS CASSETTE DOWN SWITCH　　PASS ROTARY ENCORDER　　PASS DRUM MOTOR　　PASS CAPSTAN MOTOR　　PASS SUPPLY REEL MOTOR　　PASS TAKEUP REEL MOTOR　　PASS RECODER: NO TAPE TEST OFF F1　F2　F3　F4　F5　F6　F7 結果表示：PASS …正常 FAULT…異常 注意：メカデバイステストモードに設定した場合、1度テストを実行しないと次のモードに移ることができない。

4. RECOGNITION SWITCH CHECK(4. レコグニションスイッチおよびストップ位置確認)

使用機器、治工具；使用せず
使用テストテープ；テストテープ(01010)("2-2-1. 準備"参照)
テストテープ(10101)("2-2-1. 準備""参照)

手順	確認／規格
(1) ↑、↓キーで"4. RECOGNITION SWITCH CHECK"を選択する。 (2) F1 (TEST ON)キーを押す。 (3) テストテープ(01010)を挿入する。ELディスプレイ画面の表示結果とテストテープ(01010)の識別孔が一致することを確認する。	ELディスプレイ画面 RECORDER ADJUSTMENT　　4. RECOGINITION SWITCH CHECK HOLE-1(RESERVED)　　OPEN　(0) HOLE-2(THIN)　　CLOSE　(1) HOLE-3(WIDE)　　OPEN　(0) HOLE-RECINH　　CLOSE　(1) HOLE-4(SOFT TAPE)　　OPEN　(0) RECODER: SBOFF TEST OFF F1　F2　F3　F4　F5　F6　F7 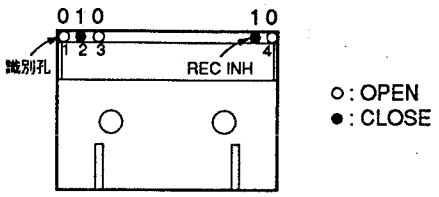
(4) EJECTキーを押してテストテープ(01010)をイジェクトする。 (5) テストテープ(10101)を挿入する。ELディスプレイ画面の表示結果とテストテープ(10101)の識別孔が一致することを確認する。	ELディスプレイ画面 RECORDER ADJUSTMENT　　4. RECOGINITION SWITCH CHECK HOLE-1(RESERVED)　　CLOSE　(1) HOLE-2(THIN)　　OPEN　(0) HOLE-3(WIDE)　　CLOSE　(1) HOLE-RECINH　　OPEN　(0) HOLE-4(SOFT TAPE)　　CLOSE　(1) RECODER: SBOFF TEST OFF F1　F2　F3　F4　F5　F6　F7 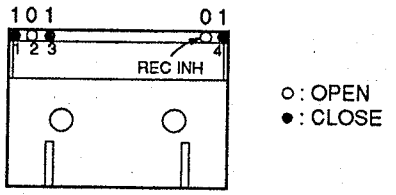
(6) PLAYキーを押す。	確認：①クリーニングローラーがドラムに当り、すぐ離れることを確認する。 ②キャプスタン軸にピンチローラーが圧着し、回転することを確認する。

(7) STOPキーを押す。	**確認**：ピンチローラー の停止位置を確認する。 **規格**：キャプスタン軸とピンチローラー の隙間＝1.5mmから2.5mm 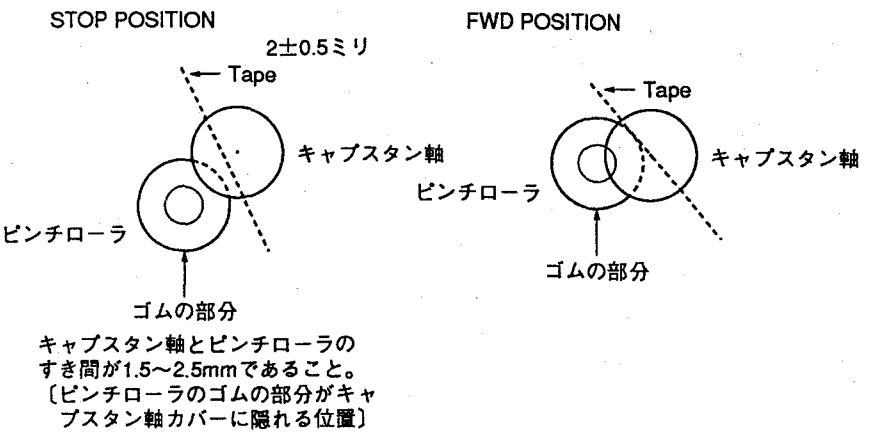 キャプスタン軸とピンチローラの すき間が1.5～2.5mmであること。 〔ピンチローラのゴムの部分がキャ プスタン軸カバーに隠れる位置〕
(8) F1(TEST ON)キーを押す。自動的にテストテープ(10101)がイジェクトされる。	

5. END SENSOR LEVEL CHECK(HIGH) (5. エンドセンサー動作確認(HIGH))

使用機器、治工具；使用せず
使用テストテープ；空カセット

手順	確認／規格
(1) ↑、↓キーで"5. END SENSOR LEVEL CHECK(HIGH)"を選択する。 (2) F1(TEST ON)キーを押す。 (3) 空カセットを挿入する。 ELディスプレイ画面にセンサーレベルが表示される。センサーレベルが規格を満足することを確認する。 (4) F1(TEST OFF)キーを押す。自動的に空カセットがイジェクトされる。	ELディスプレイ画面 RECORDER ADJUSTMENT　　5. END SENSOR LEVEL CHECK(HIGH) T-END SENSOR LEVEL = X.XX V (XXH) S-END SENSOR LEVEL = X.XX V (XXH) RECODER: SBOFF TEST OFF F1　F2　F3　F4　F5　F6　F7 **規格**；センサーレベル＝1.0 V以上

6. END SENSOR LEVEL CHECK(LOW) (6. エンドセンサー動作確認(LOW))

使用機器、治工具；使用せず
使用テストテープ；テストテープ(エンドセンサー(LOW))("2-2-1.準備"参照)

手順	確認／規格
(1) ↑、↓キーで"6. END SENSOR LEVEL CHECK(LOW)"を選択する。 (2) F1 (TEST ON)キーを押す。 (3) テストテープ(エンドセンサー(LOW))を挿入する。 **注意；**テストテープ(エンドセンサー(LOW))は、テープの巻き取り中央付近で使用する。 ELディスプレイ画面にセンサーレベルが表示される。センサーレベルが規格を満足することを確認する。 (4) F1 (TEST OFF)キーを押す。自動的にテストテープ(エンドセンサー(LOW))がイジェクトされる。	ELディスプレイ画面 RECORDER ADJUSTMENT 6. END SENSOR LEVEL CHECK (LOW) T-END SENSOR LEVEL = X.XX V (XXH) S-END SENSOR LEVEL = X.XX V (XXH) RECODER: SBOFF TEST OFF F1 F2 F3 F4 F5 F6 F7 **規格；**センサーレベル＝0.2 V 以下

7. DEW SENSOR CHECK(7. DEWセンサーレベル確認)

使用機器、治工具；使用せず
使用テストテープ；使用せず

手順	確認／規格
(1) ↑、↓キーで"7. DEW SENSOR LEVEL CHECK"を選択する。 (2) F1 (TEST ON)キーを押す。ELディスプレイ画面にセンサーレベルが表示される。センサーレベルが規格を満足していることを確認する。 (3) F1 (TEST OFF)キーを押す。	ELディスプレイ画面 RECORDER ADJUSTMENT 7. DEW SENSOR LEVEL CHECK DEW SENSOR LEVEL = X.XX V (XXH) RECODER: NO TAPE TEST OFF F1 F2 F3 F4 F5 F6 F7 **規格；**センサーレベル＝0.1 V＜X.XX V＜0.4 V 表示レベル

8. REEL TORQUE CHECK(8. FF/REW最大、最小トルク確認)

使用機器、治工具；使用せず
使用テストテープ；トルクカセット TW-7231

手順	確認／規格
(1) ↑、↓キーで"8. REEL TORQUE CHECK"を選択する。 (2) F1 (TEST ON)キーを押す。 (3) トルクカセット(TW-7231)を挿入する。	ELディスプレイ画面(TEST ON画面) RECORDER ADJUSTMENT　　8. REEL TORQUE CHECK CHECK　OFF ⇨REEL TORQUE CHECK　FF L(1.5V) CHECK　OFF REEL TORQUE CHECK　REW L(1.5V) CHECK　OFF REEL TORQUE CHECK　FF H(4.3V) CHECK　OFF REEL TORQUE CHECK　FF L(4.3V) CHECK　OFF OFFSET　TORQUE RECODER: SBOFF --- TEST OFF F1　F2　F3　F4　F5　F6　F7
(4) ↑、↓キーで"REEL TORQUE CHECK FF L"を選択する。 トルクカセット(T側リール)のトルク値が規格内(右記)であることを確認する	注意；T＝TAKE UPリール側、S＝SUPPLYリール側 規格；T-REEL トルク＝0.0004～0.001 N·m(4～10 g·cm)
(5) ↑、↓キーで"REEL TORQUE CHECK REW L"を選択する。 トルクカセット(S側リール)のトルク値が規格内(右記)であることを確認する	規格；S-REEL トルク＝0.0004～0.001 N·m(4～10 g·cm)
(6) ↑、↓キーで"REEL TORQUE CHECK FF H"を選択する。 トルクカセット(T側リール)のトルク値が規格内(右記)であることを確認する	規格；T-REEL トルク＝0.0026 N·m以上(26 g·cm以上)
(7) ↑、↓キーで"REEL TORQUE CHECK REW H"を選択する。 トルクカセット(S側リール)のトルク値が規格内(右記)であることを確認する	規格；S-REEL トルク＝0.0026 N·m以上(26 g·cm以上)
(8) F1 (TEST OFF)キーを押す。 自動的にトルクカセットがイジェクトされる。	

9. FWD/REV TORQUE ADJUSTMENT (9. FWD/REVトルクおよびバックテンション調整)

使用機器、治工具；使用せず
使用テストテープ；トルクカセット TW-7131

手順	確認／規格
(1) ↑、↓キーで、"9. FWD/REV TORQUE ADJUSTMENT"を選択する。 (2) F1 (TEST ON)キーを押す。 (3) トルクカセット(TW-713 1)を挿入する。	ELディスプレイ画面 (TEST ON画面) 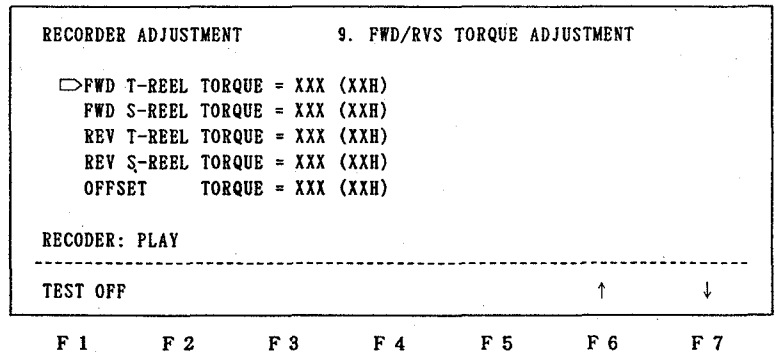
(4) ↑、↓キーで、"FWD T-REEL TORQUE"を選択する。 (5) PLAYキーを押す。	規格；T-REEL トルク＝0.0050±0.0005 N·m(5.0±0.5 g·cm) 調整；F6 (UP)キー, F7 (DOWN)キーを押して行う。
(6) ↑、↓キーで、"FWD S-REEL TORQUE"を選択する。	規格；S-REEL トルク＝0.0065±0.0005 N·m(6.5±0.5 g·cm) 調整；F6 (UP)キー, F7 (DOWN)キーを押して行う。
(7) ↑、↓キーで、"REV T-REEL TORQUE"を選択する。 (8) SHUTTEL(-1)(PGM SEARCHキー)を押す。	規格；T-REEL トルク＝0.013±0.001 N·m(13±1 g·cm) 調整；F6 (UP)キー, F7 (DOWN)キーを押して行う。
(9) ↑、↓キーで、"REV S-REEL TORQUE"を選択する。	規格；S-REEL トルク＝0.008±0.001 N·m(8±1 g·cm) 調整；F6 (UP)キー, F7 (DOWN)キーを押して行う。
(10) F1 (TEST OFF)キーを押す。 自動的にトルクカセット(TW-7131)がイジェクトされる。	

10. DRUM/CAPSTAN SPEED & WOW CHECK(10. ドラム死点確認)

使用機器、治工具；使用せず
使用テストテープ；空カセット("2-2-1. 準備"参照)

手順	確認／規格
(1) ↑、↓キーで、"10. DRUM/ CAPSTAN SPEED& WOW CHECK"を選択する。 (2) F1 (TEST ON)キーを押す。 (3) 空カセットを挿入する。	ELディスプレイ画面 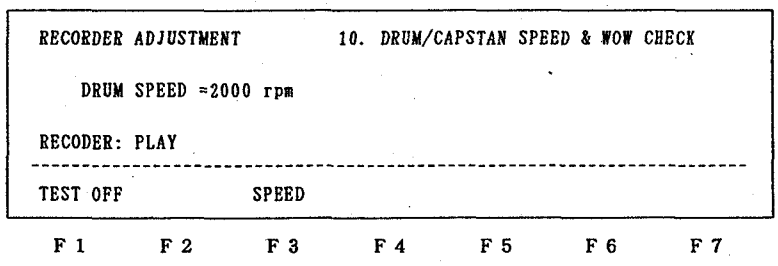
(4) PLAY キーを押す。	確認；ドラムを時計方向にゆっくり回しながら死点のないことを確認する。(指でドラムを止めた時、ドラムのどの位置でも指を離した時、ドラムが回転すること)

11. TAPE PATH ADJUSTMENT(11. テープパス調整)

使用機器、治工具

オシロスコープ
調整用ドライバー(J-6225-100-A)

使用テストテープ

テストテープ TY-7251

接続

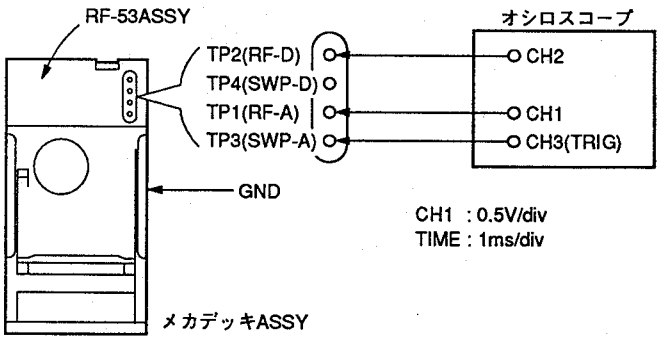

手順	確認／規格
(1) オシロスコープをRF-53 ASSYの下記箇所に接続する。 オシロスコープ　RF-53 ASSY CH1 → TP1(RF-A) CH2 → TP2(RF-D) (RECORDERのみ) CH3 → TP3(SWP-A,TRIG) GNDは、メカデッキの板金等に接続する。 (2) ↑、↓キーで、"11.TAPE PATH ADJUSTMENT"を選択する。 (3) F1(TEST ON)キーを押す。 (4) テストテープ(TY-7251)を挿入する。	ELディスプレイ画面 RECORDER ADJUSTMENT　11. TAPE PATH ADJUSTMENT ATF OFFSET = 0% RECODER: PLAY TEST OFF　0%　50%　100% F1　F2　F3　F4　F5　F6　F7
(5) PLAYキーを押す。	**規格**；RF波形(TP1)が四角くなるようにする。 RF波形 (TP1) 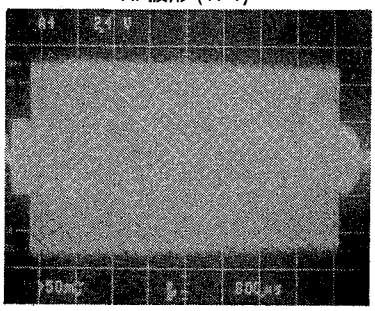 **調整**；S1ガイド, T1ガイドの高さを調整ドライバー(J-6225-100-A)を使用して微調整する。

(6) F5(100%)キーを押す。 (ATF OFF)	**確認**；RF波形(TP1)が平行に変化することを確認する。 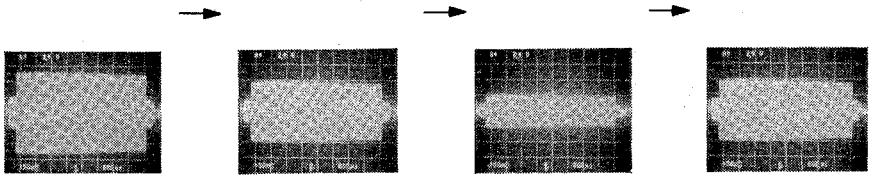 **調整**；S1ガイド、T1ガイドの高さを調整してRF波形が平行に変化するようにする。
(7) F4(50%)キーを押す。 (ATF OFFSET)	**確認**；RF波形(TP1)が下記規格を満足することを確認する。 **規格**；・波高値50%でRFの波形が長方形になること。 ・波形フラット部に対しての落込みが変動を含めて10%以内 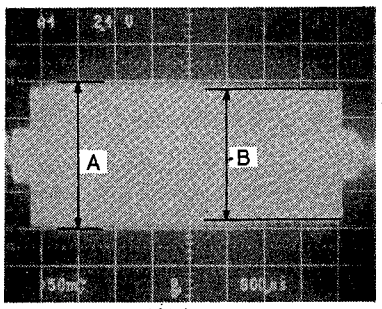 RF波形 (TP1) 規格：$\frac{B}{A} \times 100\ (\%) \geqq 80\%$
(8) F3 (0%)キーを押す。(ATF ON) (9) SHUTTEL(-16)キーを押す。 (10) PLAYキーを押した時のRF波形の立ち上がり時間を確認する。	**確認(規格)**；2秒以内にRF波形(TP1)が安定すること。
(11) EJECTキーを押し、テストテープをイジェクトする。 (12)テストテープ(TY-7251)を挿入し、PLAYキーを押し、RF波形の立ち上がり時間を確認する。	**確認(規格)**；2秒以内にRF波形(TP1)が安定すること。
(13) F1 (TEST OFF)キーを押す。 自動的にテストテープ(TY-7251)がイジェクトされる。	
(14)PLAYERメカデッキの場合はS1ガイドの高さを調整する。	**調整**；S1ガイドを調整ドライバー(J-6225-100-A)を使用して反時計方向に30°回転させる。 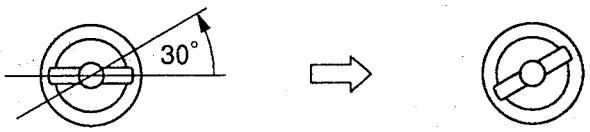 S1ガイド

12. SWP POSITION ADJUSTMENT(12. SWP位置調整)

使用機器、治工具

- オシロスコープ

使用テストテープ

テストテープ TY-7251

接続

"11.TAPE PATH ADJUSTMENT"に同じ

手順	調整／確認／規格
(1) オシロスコープをRF-53 ASSYの下記箇所に接続する。 オシロスコープ　RF-53 ASSY CH1 → TP1(RF-A) CH2 → TP2(RF-D) (RECORDER のみ) CH3 → TP3(SWP-A,TRIG) (2) F1 (TEST ON)キーを押す。 (3) テストテープ(TY-7251)を挿入する。	ELディスプレイ画面 RECORDER ADJUSTMENT　12. SWP POSITION ADJUSTMENT SWP POSITION = XXX (XXH) RECODER: PLAY TEST OFF　↑　↓ F1　F2　F3　F4　F5　F6　F7
(4) PLAY キーを押す。 F6 (UP)キー、F7 (DOWN)キーでSWP位置を調整する。	規格；SWPの立ち下がりからRF波形のマーカーの立ち下がりまでの時間(T) T=650±15μs 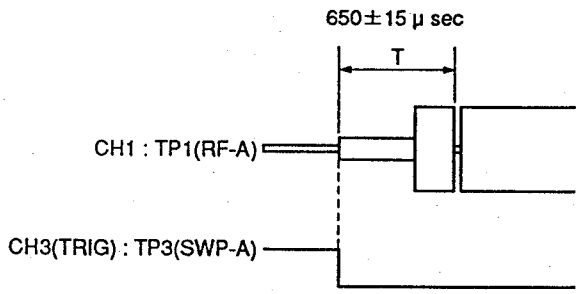 調整；・SHIFT キー＋ F6 (UP)キーまたは、F7 (DOWN)キーを押す。(10ステップ単位での調整) ・F6 (UP)キーまたはF7 (DOWN)キーを押す。(1ステップ単位での調整)
(5) F1 (TEST OFF)キーを押す。自動的にテストテープ(TY-7251)がイジェクトされる。	

13. PATH & FF/REW TIME CHECK(13. テープ走行確認およびテープカール確認)

使用機器、治工具

オシロスコープ

使用テストテープ

テストテープ(TOP) ("2-2-1. 準備"参照)
テストテープ(END) ("2-2-1. 準備"参照)
テストテープ(FF/REW TIME) ("2-2-1. 準備"参照)

接続

"11.TAPE PATH ADJUSTMENT"に同じ

手順	調整／確認／規格
(1) オシロスコープをRF-53 ASSYの下記箇所に接続する。 オシロスコープ　RF-53 ASSY CH1 → TP1(RF-A) CH3 → TP3(SWP-A, TRIG) (2) ↑、↓キーで、"13. FF/REW TIME CHECK"を選択する。 (3) F1 (TEST ON)キーを押す。 (4) テストテープ(TOP)を挿入する。	ELディスプレイ画面 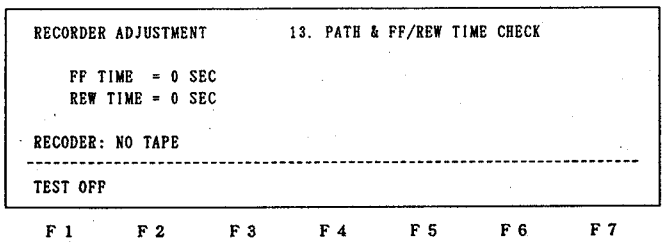
(5) SHUTTLE (+1) (LOCATE キー)および SHUTTLE (-1) (PGM SEARCH キー)を交互に繰り返し押す。 テープ走行が規格を満足することを確認する。	**規格**；ピンチローラーの前後で、テープ折れやガイドからのテープ脱落がないこと。
(6) SHUTTLE (+16) (NEXT キー)および SHUTTLE (-16) (PREVIOUS キー)を交互に繰り返し押す。 テープ走行が規格を満足することを確認する。	**規格**；ピンチローラーの前後で、テープ折れやガイドからのテープ脱落がないこと。
(7) EJECT キーを押してテストテープ(TOP)をイジェクトする。 (8) テストテープ(END)を挿入する。 (9) SHUTTLE (+1) (LOCATE キー)および SHUTTLE(-1) (PGM SERCH キー)を交互に繰り返し押す。この時のテープ走行が規格を満足することを確認する。	**規格**；ピンチローラーの前後で、テープ折れやガイドからのテープ脱落がないこと。

(10) SHUTTLE (+16) ([NEXT]キー)および SHUTTLE (-16) ([PREVIOUS]キー)を交互に繰り返し押す。この時のテープ走行が規格を満足することを確認する。	**規格**；ピンチローラーの前後で、テープ折れやガイドからのテープ脱落がないこと。
(11) [EJECT]キーを押してテストテープ(END)をイジェクトする。 (12)テストテープ(FF/REW TIME)を挿入する。 (13) [REW]キーまたは、[FF]キーでFF動作、REW動作を行い、テープ巻き取り時間が規格を満足することを確認する。	**規格**；・FF動作テープ巻取り時間＝20秒以内 REW動作テープ巻取り時間＝20秒以内 ・FFおよびREW中にテープの当り抜けが発生しないことを、オシロスコープのRF波形で確認すること。
(14) [F1](TEST OFF)キーを押す。 自動的にテストテープ(FF/REW TIME)がイジェクトされる。	

14. PB ERROR RATE CHECK(14. 再生エラーレート確認)

使用機器、治工具

オシロスコープ

使用テストテープ

テストテープ TY-7212

注意：1. ERROR RATE測定は必ず天板を取り付けて行う。
2. 確認を行う前に、クリーニングテープを使用して、10秒間クリーニングする。

手順	調整／確認／規格
(1) [↑]、[↓]キーで、"14. PB ERROR RATE CHECK"を選択する。 (2) [F1](TEST ON)キーを押す。 (3) テストテープ(TY-7212)を挿入する。	ELディスプレイ画面 RECORDER ADJUSTMENT　14. PB ERROR RATE CHECK ⇨EQ-X1-L = 64 (40H)　PB SPEED　X1 EQ-X1-H = 66 (42H) EQ-X1-Q = 59 (3BH)　PB HEAD　LEADING EQ-X1-P = 44 (2CH) ERROR RATE　A-CH X.XE-X EQ-X2-L = 21 (15H)　B-CH X.XE-X EQ-X2-H = 44 (2CH) EQ-X2-Q = 37 (25H) EQ-X2-P = 21 (15H) RECODER: PLAY　TIME CODE: 00:10:58:40 TEST OFF　HEAD　↑　↓ F1　F2　F3　F4　F5　F6　F7
(4) [PLAY]キーを押し、規格を満足することを確認する。	**規格**；再生エラーレートA-CH＝5×10^{-3}以下 (表示: 5E -3以下) 再生エラーレートB-CH＝5×10^{-3}以下 (表示: 5E -3以下)

(5) STOP キーを押す。 (6) ↑、↓キーで"EQ-X2-L"を選択する。(2倍速モードになる) (7) PLAYキーを押し、規格を満足することを確認する。	**規格；** 再生エラーレートA-CH＝5×10^{-3}以下 (表示: 5E -3以下) 再生エラーレートB-CH＝5×10^{-3}以下 (表示: 5E -3以下)
(8) STOP キーを押す。 注意；PLAYERデッキの場合は、(15)以降の確認へ進む。	
以下の確認は、RECORDERデッキのみ行う。 (9) F4(HEAD)キーを押し、画面の"PB HEAD TRAILING"を確認する。 (10) PLAY キーを押し、規格を満足することを確認する	**規格；** 再生エラーレートA-CH＝5×10^{-3}以下 (表示: 5E -3以下) 再生エラーレートB-CH＝5×10^{-3}以下 (表示: 5E -3以下)
(11) STOPキーを押す。 (12) ↑、↓ キーで"EQ-X1-P"を選択する。(ノーマルスピードモード) (13) PLAYキーを押し、規格を満足することを確認する。	**規格；** 再生エラーレートA-CH＝5×10^{-3}以下 (表示: 5E -3以下) 再生エラーレートB-CH＝5×10^{-3}以下 (表示: 5E -3以下)
(14) STOPキーを押す。 (15) オシロスコープをRF-53 ASSYの下記箇所に接続する。 オシロスコープ　RF-53 ASSY <RECORDERの場合> CH1 → TP2(RF-D) CH3 → TP4(SWP-D, TRIG) <PLAYERの場合> CH1 → TP1(RF-A) CH3 → TP3(SWP-A, TRIG) (16) SHUTTLE (-2) (4 キー)を押す。	**確認；** RF波形(TP2)が下記規格を満足することを確認する。 **規格；** RF波形の立ち上がり2sec以内 $\frac{B}{A} \geqq \frac{5}{10}$ $\frac{C}{A} \geqq \frac{5}{10}$ 波形が10秒間安定していることを確認する。
(17) REWキーを押す。 (18) SHUTTLE (-2) (4 キー)を押す。	
(19) F1(TEST OFF)キーを押す。 自動的にテストテープ TY-7212がイジェクトする。	

15. REC CURRENT ADJUSTMENT(LEADING)(15. 記録レベル調整(先行ヘッド)(RECORDERデッキのみ))

使用機器、治工具

オシロスコープ
RFレベルチェッカー PD-817
RFレベルチェッカー用 I/Fボックス PF-534

使用テストテープ

テストテープ TY-7111DX
テストテープ TY-30BX

接続

接続は、PCM-E7700のPOWERスイッチをOFFにして行う。
RF-534のケーブル(15P)のCN302/SSP-8基板への接続は、キーパネルASSYを外して行う。
調整は、ケーブル(15P)を、はさまないようにして、キーパネルASSYを本体に取り付けてから行う。

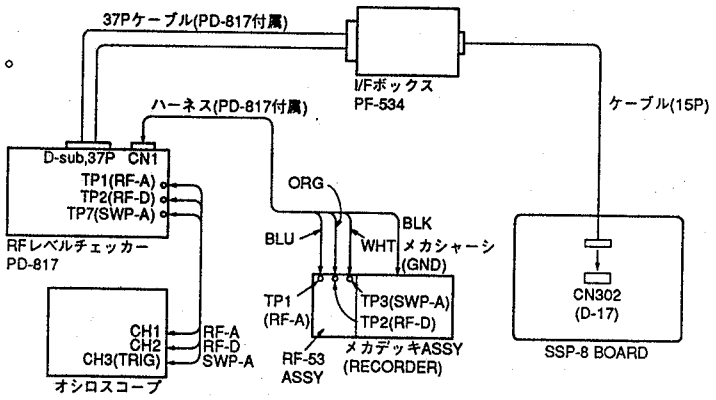

手順	調整／確認／規格
(1) ↑、↓キーで、"15. REC CURRENT ADJUSTMENT (LEADING)"を選択する。 (2) F1 (TEST ON)キーを押す。 (3) テストテープ(TY-7111DX)を挿入する。 (4) テストテープ(TY-7111DX)に添付されている校正値表に従って、校正値をRFレベルチェッカー(PD-817)のOFF SETダイヤルで設定する。*1 (5) PLAY キーを押す。 RF波形(オシロスコープ)が安定することを確認する。 (6) RFレベルチェッカー(PD-817)の CAL キーを押す。	ELディスプレイ画面 RECORDER ADJUSTMENT　15. REC CURRENT ADJUSTMENT(LEADING) REC CURRENT PCM-A XXX (XXH) REC CURRENT PCM-B XXX (XXH) REC CURRENT ATF-A XXX (XXH) REC CURRENT ATF-B XXX (XXH) RECODER: REC　TIME CODE: 00:10:58:40 TEST OFF　↑ ↓ F1 F2 F3 F4 F5 F6 F7

(7) CAL 終了後、RFレベルチェッカー (PD-817)のCALキーのLEDが点滅から点灯に変わったら、EJECTキーを押して、テストテープ(TY-7111DX) をイジェクトさせる。	
(8) テストテープ(TY-30BX,ブランク部分)を挿入する。 (9) RFレベルチェッカー(PD-817)のLEADING (A/B)キーを押す。先行ヘッドのPCM/ATF(Ach, Bch)記録電流レベルの自動測定(自己記録・再生)が行われる。 (10) 自動測定終了後(LEADINGキーのインジケータが点滅から点灯に変わる)、記録レベルがRFレベルチェッカーのレベルメーターに表示される。記録レベルが規格を満足するように手順(8), (9), (10)を繰り返し行う。	規格；PCM-AおよびPCM-Bの記録レベル＝0.5±0.5 dB ATF-AおよびATF-Bの記録レベル＝-0.5±0.5 dB RFレベルチェッカーのレベルメーター表示 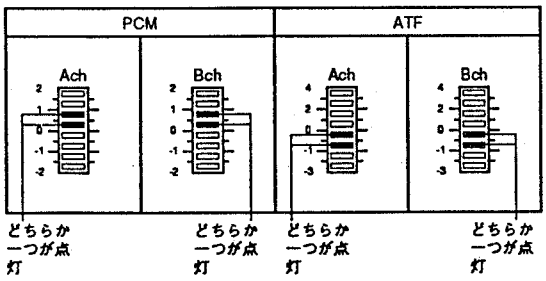 調整；↑、↓キーで規格外の項目を選択し、F6およびF7キーで以下のように調整する。 記録レベルを上げるにはF6 (UP) キーを押す。 記録レベルを下げるにはF7 (DOWN)キーを押す
(11) F1 (TEST OFF)キーを押す。自動的にテストテープ(TY-30BX)がイジェクトされる。	

*1: オフセットダイヤルの設定

使用するテストテープ(TY-7111DX)に添付の校正値表に従って、1.57 MHz, 130 kHzのAch/Bchの校正値をRF LEVEL CHECKERのオフセットダイヤルで設定する。

設定例

校正値表の表示

	130.7(kHz)	1.568(MHz)
Ach	0.1	-0.3
Bch	+0.2	+0.2

オフセットダイヤルの設定(上記の校正値の場合)

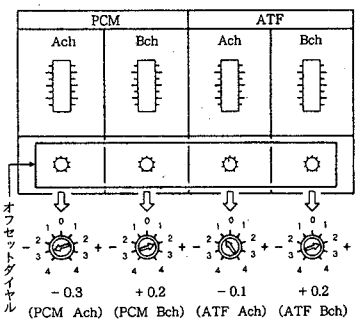

16. REC CURRENT ADJUSTMENT (TRILING) (16. 記録レベル調整(後行ヘッド) (RECORDERデッキのみ))

使用機器、治工具

オシロスコープ
RFレベルチェッカー PD-817
RFレベルチェッカー用 I/Fボックス PF-534

使用テストテープ

テストテープ TY-30BX
テストテープ TY-7111DX

接続

"15.REC CURRENT ADJUSTMENT (LEADING)"に同じ

手順	調整／確認／規格
(1) ↑、↓キーで、"16. REC CURRENT ADJUSTMENT (TRAILING)"を選択する。 (2) F1 (TEST ON) キーを押す。 (3) テストテープ(TY-7111DX)を挿入する。 (4) テストテープ(TY-7111DX)に添付されている校正値表に従って、校正値をRFレベルチェッカー(PD-817)のOFF SETダイヤルで設定する。*1(2-22ページ参照) (5) PLAYキーを押す。 RF波形(ｵｼﾛｽｺｰﾌﾟ)が安定することを確認する。 (6) RFレベルチェッカー(PD-817)のCALキーを押す。 (7) CAL終了後、RFレベルチェッカー(PD-817)のCALキーのLEDが点滅から点灯に変わったら、EJECTキーを押して、テストテープ(TY-7111DX)をイジェクトさせる。	ELディスプレイ画面 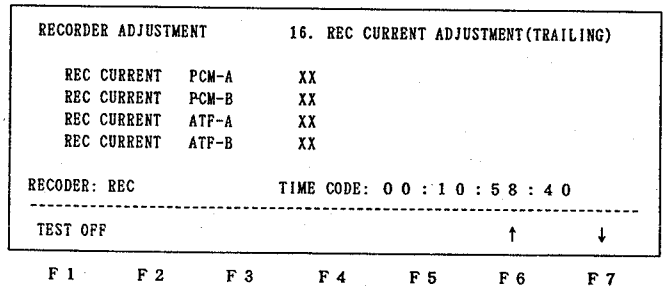

(8) テストテープ(TY-30BX、ブランク部分)を挿入する。 (9) RFレベルチェッカー(PD-817)の TRAILING(A/B) キーを押す。後行ヘッドのPCM/ATF(Ach, Bch)記録電流レベルの自動測定(自己記録・再生)が行われる。 (10) 自動測定終了後(TRILING キーのインジケーターが点滅から点灯に変わる)、記録レベルがRFレベルチェッカーのレベルメーターに表示される。記録レベルが規格を満足するように手順(8)、(9)、(10)を繰り返し行う。	**規格**；PCM-AおよびPCM-Bの記録レベル＝0.5±0.5 dB ATF-AおよびATF-Bの記録レベル＝−0.5±0.5 dB RFレベルチェッカーのレベルメーター表示 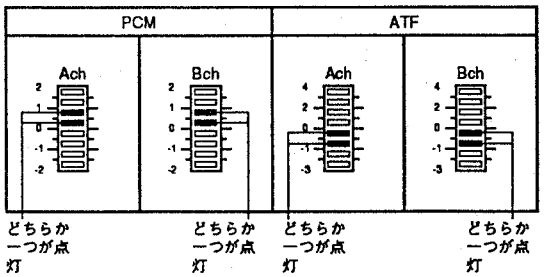 **調整**；↑、↓ キーで規格外の項目を選択し、F6 および F7 キーで以下のように調整する。 記録レベルを上げるには F6 (UP)キーを押す。 記録レベルを下げるには F7 (DOWN)キーを押す。
(11) F1 (TEST OFF)キーを押す。自動的にテストテープ(TY-30BX)がイジェクトされる。	

17. REC/PB ERROR RATE CHECH(17. 自己記録再生エラーレート確認))

使用機器、治工具；使用せず

使用テストテープ；テストテープTY-30BX

注意：1. REC/PB ERROR RATE 測定は、必ず天板を取り付けて行う。
2. 確認を行う前に、クリーニングテープを使用して、クリーニングを行う。

手順	調整／確認／規格
(1) ⊡、⊡キーで"17. REC/PB ERROR RATE CHECK"を選択する。 (2) F1 (TEST ON)キーを押す。 (3) テストテープ(TY-30BX)を挿入する。 (4) 画面の"REC HEAD LEADING"を確認する。	ELディスプレイ画面 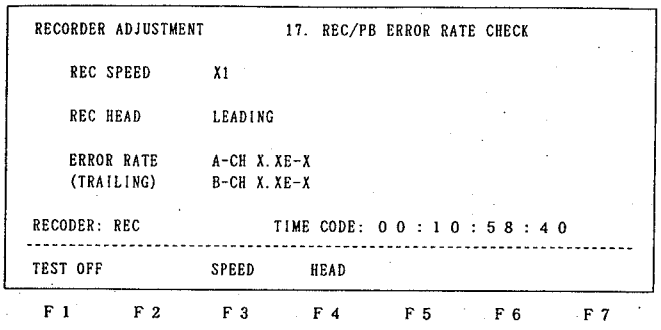
(5) PLAYキーを押す。 (6) AUTO EDITキーを押し、先行記録(X1)中の後行再生エラーレートが規格を満足することを確認する。	**規格；**エラーレート A-CH=5E-3(画面表示) (5×10^{-3}以下) B-CH=5E-3(画面表示) (5×10^{-3}以下)
(7) STOPキーを押す。 (8) F3 (SPEED)キーを押して"REC SPEED X2"を選択する。 (9) PLAYキーを押す。 (10) AUTO EDITキーを押し、先行記録(X2)中の後行再生エラーレートが規格を満足することを確認する。 (11) STOPキーを押す。	**規格；**エラーレート A-CH=5E-3(画面表示) (5×10^{-3}以下) B-CH=5E-3(画面表示) (5×10^{-3}以下)
(12) F3 (SPEED)キーを押して"REC SPEED X1"を選択する。 (13) F4 (HEAD)キーを押す。画面の"REC HEAD TRAILING"を確認する。 (14) PLAYキーを押す。 (15) AUTO EDITキーを押し、20秒間記録する。 (16) STOPキーを押す。	

(17) SHUTTLE(-2) ([4]キー)を押して、記録開始部分まで巻き戻す。 **注意**；巻き戻しは、ディスプレイ画面のTIME CODE を目安に行う。	
(18) [PLAY]キーを押して、後行記録部分を再生し、再生エラーレートが規格を満足することを確認する。	**規格**；エラーレート A-CH＝5E-3 (画面表示) (5×10^{-3}以下) B-CH＝5E-3 (画面表示) (5×10^{-3}以下)
(19) [STOP]キーを押す。 (20) [F1](TEST OFF) キーを押す。 自動的にテストテープ(TY-30BX)がイジェクトされる。	

18. SERVO DATA SAVE (18. サーボデーターセーブ)

使用機器、治工具；使用せず
使用テストテープ；使用せず

手順	確認
(1) SV-147基板のS1-2(BIT SW2)スイッチを"ON"にし、ディスプレイ画面(調整項目表示画面)の右上で確認する。	
(2) [↑]、[↓]キーで"18. SERVO DATA SAVE"を選択する。 (3) [F1](TEST ON)キーを押す。 ディスプレイ画面のMESSAGE；"SAVING IS COMPLETED!"を確認する。 (4) 確認後、[F1](TEST OFF)キーを押す。 (5) SV-147基板のS1スイッチを以下のように設定する。 S1-1 to S1-4：すべてOFF	ELディスプレイ画面

```
 RECORDER ADJUSTMENT          18. SERVO DATA SAVE

SWP POSITION = 117 (75H) EQ-L-X1 = 64 (40H) REC-L-PCMA1 = 217 (D9H)
                         EQ-H-X1 = 66 (42H) REC-L-PCMB1 = 217 (D9H)
FWD TORQ T   =  14 (0EH) EQ-Q-X1 = 59 (3BH) REC-L-ATFA1 =  16 (10H)
FWD TORQ S   = 128 (80H) EQ-P-X1 = 44 (2CH) REC-L-ATFB1 =  16 (10H)
REV TORQ T   =  65 (41H)
REV TORQ S   = 138 (8AH) EQ-L-X2 = 21 (15H) REC-T-PCMA1 = 217 (D9H)
BACK TENTION =  56 (38H) EQ-H-X2 = 44 (2CH) REC-T-PCMB1 = 217 (D9H)
                         EQ-Q-X2 = 37 (25H) REC-T-ATFA1 =  16 (10H)
END T HIGH   = 128 (80H) EQ-P-X2 = 21 (15H) REC-T-ATFB1 =  16 (10H)
END S HIGH   = 128 (80H)
END T LOW    =  00 (00H)
END S LOW    =  00 (00H)

      MESSAGE

          SAVING IS COMPLETED!

RECODER: NO TAPE
-------------------------------------------------------------------
 TEST OFF

  F 1      F 2      F 3      F 4      F 5      F 6      F 7
```

19. SERVO DATA DISPLAY（19. サーボデーターディスプレイ）

使用機器、治工具；使用せず
使用テストテープ；使用せず

注意： サーボデータディスプレイは、サーボデータの確認などに使うモードである。
調整中にサーボデータディスプレイを実行することによりその調整値を確認することができる。

手順	確認
(1) [↑]、[↓]キーで"19. SERVO DATA DISPLAY"を選択する。 (2) [F1]（TEST ON）キーを押す。 (3) ディスプレイ画面上のサーボデータを確認する。 (4) [F2]（EXIT）キーを押す	ELディスプレイ画面

```
 RECORDER ADJUSTMENT          19. SERVO DISPLAY

SWP POSITION = 117 (75H) EQ-L-X1 = 64 (40H) REC-L-PCMA1 = 217 (D9H)
                         EQ-H-X1 = 66 (42H) REC-L-PCMB1 = 217 (D9H)
FWD TORQ T   =  14 (0EH) EQ-Q-X1 = 59 (3BH) REC-L-ATFA1 =  16 (10H)
FWD TORQ S   = 128 (80H) EQ-P-X1 = 44 (2CH) REC-L-ATFB1 =  16 (10H)
REV TORQ T   =  65 (41H)
REV TORQ S   = 138 (8AH) EQ-L-X2 = 21 (15H) REC-T-PCMA1 = 217 (D9H)
BACK TENTION =  56 (38H) EQ-H-X2 = 44 (2CH) REC-T-PCMB1 = 217 (D9H)
                         EQ-Q-X2 = 37 (25H) REC-T-ATFA1 =  16 (10H)
END T HIGH   = 128 (80H) EQ-P-X2 = 21 (15H) REC-T-ATFB1 =  16 (10H)
END S HIGH   = 128 (80H)
END T LOW    =  00 (00H)
END S LOW    =  00 (00H)


RECODER: NO TAPE
-------------------------------------------------------------------
            EXIT

  F1      F2      F3      F4      F5      F6      F7
```

2-2-3. SV-147基板交換時の確認

SV-147基板を交換した際、交換後、メカデッキASSYを本体に取り付ける前に以下の確認を必ず行う。

使用機器、治工具

使用せず

使用テストテープ

空カセット("2-2-1.準備"参照)

サーボマイコン動作確認

(1) SV-147基板のBITスイッチ(S1-3)をONにする。

(2) 本体の電源(POWER)をONにする。

(3) SV-147基板のLED(D1)が、1秒周期で点滅していることを確認する。

(4) 空カセットを挿入し、SV-147基板のBITスイッチ(S1-1)をONにする。

(5) 空カセットがイジェクトされることを確認し、BITスイッチ(S1-1)をOFFにする。

以上の確認終了後、"2-2. 調整および確認"に従って調整、確認を行う。

第3章
電気調整

ここでは、ADA-31基板の修理および保守を行う際に必要な電気調整について述べる。
ADA-31基板の調整は、下記"調整項目"について行う。

調整項目

3-1. A/D、D/A系調整(ADA-31基板)

3-1-1. A/D変換レベル調整

↓

3-1-2. D/A変換レベル調整

使用機器

名称	規格	機器名
オーディオアナライザー	・AFオシレータ レンジ；10 to 100 kHz レベル；−70 to +24 dBm ・ディストーション アナライザー (レベルメーター)	TEKRONIX SG505(OP2)、AA501または相当品

3-1. A/D、D/A系調整(ADA-31基板)

準備

・本調整は、天板およびキーASSYを外して行う。
ただし、キーASSYからのハーネスは接続したままとする。
(外し方は、"MAINTENANCE MANUAL Part1"参照)

・以下の手順でMODE設定を行った後、調整を行う。
(設定方法は、"OPERATION GUIDE"を参照)

手順

(1) SET UPモード(ELディスプレイ画面)(SUB MODE；SYSTEM)の"FACTORY SETTING"(工場出荷時の設定データ)を呼び出す。

(2) MANUAL RECモード(ELディスプレイ画面)のSUB MODE；EXT ANALOG(外部入力モード)に設定する。

以下の調整は、このモードで行う。

3-1-1. A/D変換レベル調整

ここでは、ADA-31基板のA/Dブロックの電気調整を行う。
ADA-31基板を交換した際、最初に行う。
引き続き"3-1-2. D/A変換レベル調整"を行う。

使用機器

オーディオアナライザー(AFオシレーター)

接続

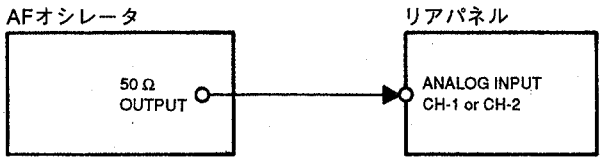

調整箇所

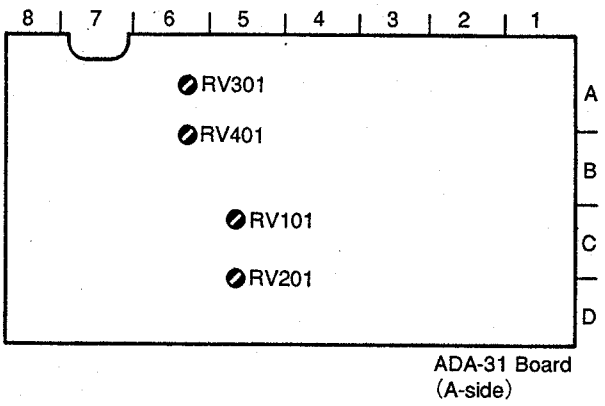

調整前の準備

1. ファンクションキー F7 "METER"を押して、METER表示を数値表示にする。

2. GAIN表示がCH1、CH2共"0.0 dB"表示であることを確認する。
   0.0 dB表示になっていない場合、ファンクションキー F6 "BAL RES"および F7 "LVL RES"を押して、GAIN表示を0.0 dBにする。

ステップ	調整時の状態	規格	調整箇所(ADA-31基板)
1	・ANALOG IN CH1コネクターに1 kHz、4 dBsの信号を入力する。	METER表示CH1の数値； −20.0 dB	◐RV101(C、5)
2	・ANALOG IN CH2コネクターに1 kHz、4 dBsの信号を入力する。	METER表示CH2の数値； −20.0 dB	◐RV201(D、5)

3-1-2. D/A変換レベル調整

ここでは、ADA-31基板のD/Aブロックの電気調整を行う。
調整は、"3-1-1. A/D変換レベル調整"の後に行う。

使用機器

オーディオアナライザー(AFオシレーター、
ディストーションアナライザー
(レベルメータ))

調整箇所

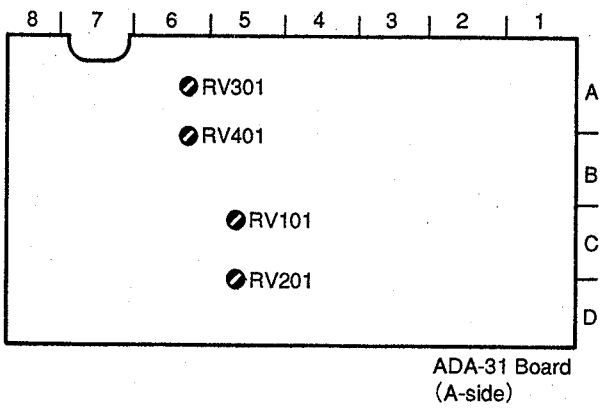

接続

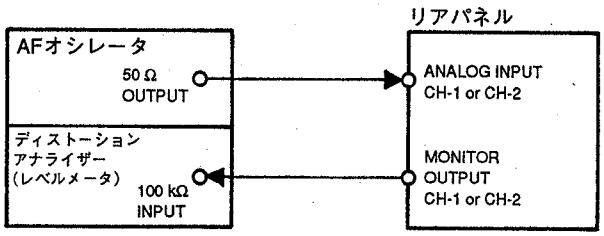

ステップ	調整時の状態	規格	調整箇所(ADA-31基板)
1	・ANALOG IN CH1コネクターに1 kHz、4 dBsの信号を入力する。	MONITOR OUTPUT CH1 出力レベル; −10 dBs±0.5 dB	RV301(A、6)
2	・ANALOG IN CH2コネクターに1 kHz、4 dBsの信号を入力する。	MONITOR OUTPUT CH2 出力レベル; −10 dBs±0.5 dB	RV401(B、6)

SECTION 1
SERVICE OVERVIEW

1-1. REPLACEMENT OF DC FAN MOTOR

Note: Turn off the power supply switch and disconnect the power cord.

Procedure:

(1) Remove the five screws (PWH3 × 6) and remove the bottom board assembly.
Next, remove the five screws (PWH3 × 5).

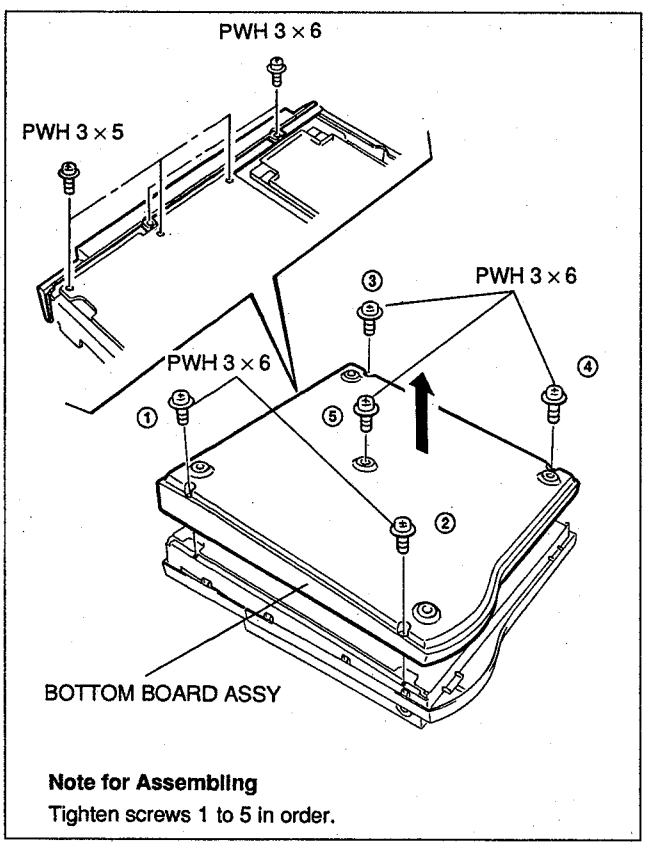

Note for Assembling
Tighten screws 1 to 5 in order.

(2) Remove the three screws (PWH3 × 6), slide the top board backwards and remove it upwards.

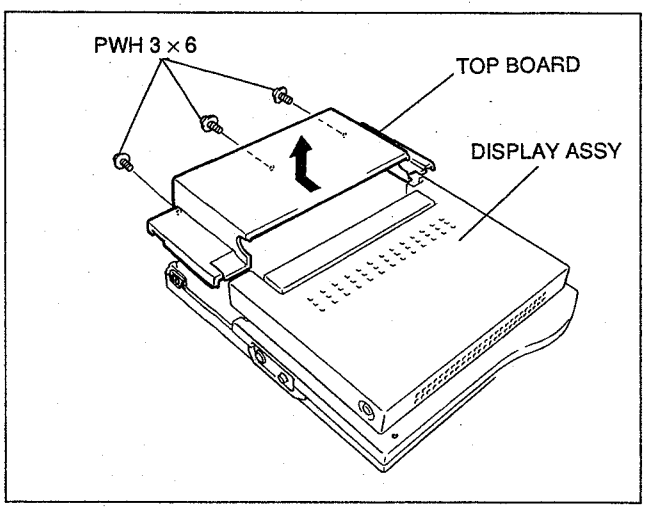

(3) Remove the two screws (PWH3 × 5) and the ground plate (TB).
Remove the two claws and the rear panel.

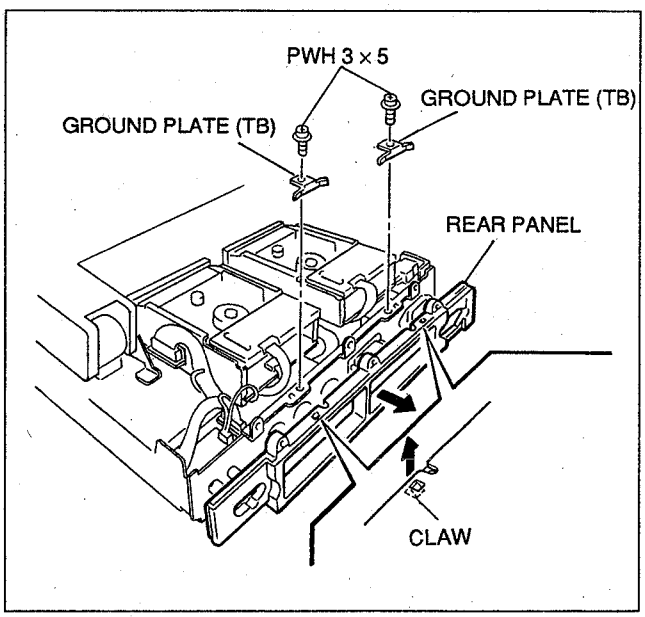

(4) Remove the CN1/CP-234 board and the five screws (PWH3 × 5, PS4 × 8), and pull out the rear chassis. Remove the harness from the CN706 connector of the SSP-8 board and remove the four screws (B3 × 20). Remove the DC fan motor and replace it with a new one.

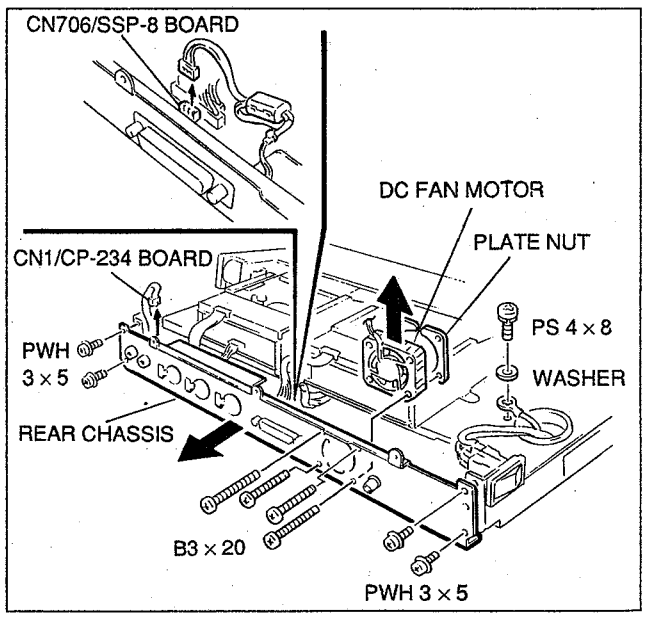

1-2. SERVICE INFORMATION ON SSP-8 BOARD

1-2-1. LEDs for Checking Operations on SSP-8 Board

The SSP-8 board has the following LEDs for checking operations. Their functions are as follows.

D106 (RED): Lights up when the I/O CPU (IC103) fails
(When operating normally: Off)

D107 (RED): Lights up when GDC (IC125) fails
(When operating normally: Off)

D108 (YELLOW): Lights up when the EEROM (IC115) is accessing

D109 (GREEN): Blinks when the I/O CPU block is operating normally
(At intervals of approximately 0.2s)

ND301: Display stops when the player CPU block is not operating normally

ND501: Display stops when the recorder CPU block is not operating normally

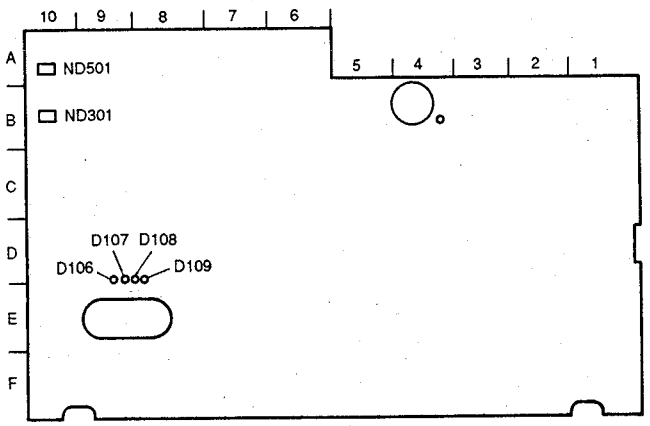

SSP-8 Board
(Component side)

1-2-2. Replacement of Lithium Battery (CR-2450)

The life of the lithium battery (CR-2450) incorporated in the SSP-8 board for backing up the battery will not be displayed. Therefore replace it according to how long the unit has been used, etc.

Standard time for replacement: Approximately every 3 years.

Replace it as follows.

Part Name:

Lithium battery (CR-2450): 1 (Part No: 1-528-229-11)

Outline of Operations

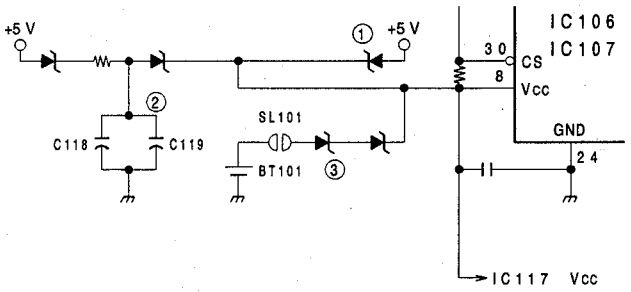

In the above circuit, the +5 V of Vcc and the +5 V pull up resistance of the CS are supplied to IC106, IC107, and IC117 by three power supplies.

They are:

① Main power supply
② +5 V from C118 and C119 charged by the main power supply
③ +3 V from BT101

- While the unit is operating, they will be supplied by ①. ② will be charged at the same time.
- When the unit is turned off, they will be supplied by ②.
- When ② has discharged all its power, power will be supplied by ③.

The SRAM data of IC106 and IC107 and the clock of IC117 are backed up in this way.

Replacing Procedure

(1) Turn on the power switch of PCM-E7700 and let the power flow for more than ten minutes.
(2) Turn off the power switch.
(3) Remove the SSP-8 board from the unit.
For details of removing, refer to "SECTION 3. CABINET REMOVAL" and "SECTION 6-2. EXPLODED VIEWS AND PARTS" in Maintenance Manual Part 1.
(4) Desolder the slit land (SL101) on the component side of the SSP-8 board.
(5) Remove the lithium battery (BT101) from the SSP-8 board.
(6) Install the new lithium battery (CR-2450) to the SSP-8 board.
(7) Solder (solder bridge) the slit land (SL101).

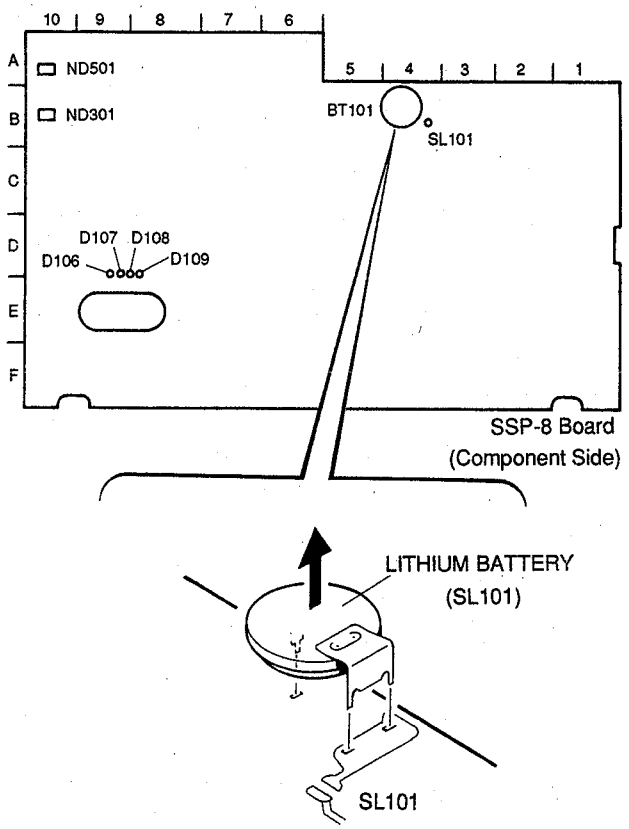

(8) Attach the SSP-8 board to the unit.
(9) Turn on the power switch.
(10) Check that no error message is displayed when started up.

Note:

- The SRAM and clock data will be destroyed if the pins of IC106, IC107, and IC117 are short-circuited during the replacement.
- Check that the voltage of the new battery is more than 2.6 V before the replacement.

1-3. SWITCH SETTING/LED FUNCTION ON SV-147 BOARD

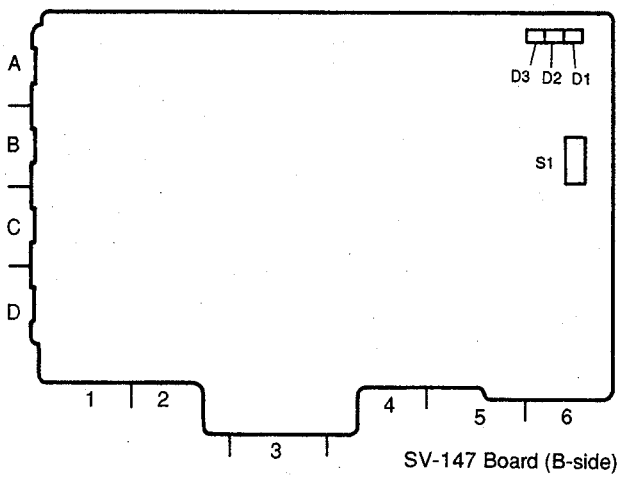

SV-147 Board (B-side)
(Mecha Deck Assy)

Switches

S1 (S1-1 to S1-4); Adjustment Mode Setting Switch
(For details, refer to "Section 2. Replacement and Adjustment of Mechanism Deck")

Factory setting

S1-1 to S1-4; All OFF
(Setting for normal operations)

LED

D1; CPU Operation Indicator
Blinking (Approx. every 1 sec.) .....When operating normally
Blinking quickly
(Approx. every 0.5 sec.) .....When an error is detected
Lit or off.....When not operating

D2; Adjusting Mode Indicator
Lit .... When adjustment mode is ON
Off ... When adjustment mode is OFF

D3; Servo Lock Indicator
Lit .... Locked
Off ... Unlocked

1-4. NOTES ON REPAIR PARTS

1-4-1. Notes on Repair Parts

(1) Safety Related Components Warning
Components marked with ⚠ on the schematic diagrams, exploded views and electrical spare parts list are critical to safe operation. Replace these components with Sony parts whose part numbers appear in this manual or in service bulletins and service manual supplements published by Sony.

(2) Standardization of Parts
Repair parts supplied from Sony Parts Center may not be always identical with the parts which actually in use due to "accommodating the improved parts and/or engineering changes" or "standardization of genuine parts".
This manual's exploded views and electrical spare parts list are indicating the part numbers of "the standardized genuine parts at present".

(3) Change of Parts
Regarding engineering parts changes, refer to "CHANGED PARTS"

(4) Stock of Parts
Parts marked with "o" SP (Supply Code) column of the spare parts list are not normally required for routine service work. Orders for parts marked with "o" will be processed, but allow for additional delivery time.

(5) Units for Capacitors and Resistors
The following units may be assumed in schematic diagrams, electrical parts list and exploded views unless otherwise specified.
Capacitors : μF
Resistors : Ω

1-4-2. Replacement Procedure for Chip Parts

Required Tools

Soldering iron: 20W If possible, use a soldering iron tip heat-controller at 270 ± 10°C.
Braided wire: SOLDER TAUL or equivalent
Sony part No. 7-641-300-81
Solder: 0.6 mm dia. is recommended.
Tweezers

Soldering Conditions

Soldering iron temperature: 270 ± 10°C.
Soldering time: less than two seconds per a pin.

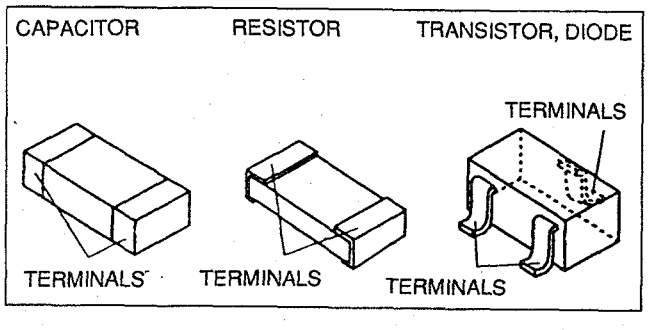

• **Resistor and Capacitor Replacement**

(1) Place the soldering iron tip onto the chip part and heat it up until the solder is melted. When the solder is melted, slide the chip part aside.
(2) Make sure that there is no pattern peeling, damage and/or bridges around the desoldering positions.
(3) After removing the chip part, presolder the area, in which the new chip part is to be placed, with a thin layer of solder.
(4) Place new chip part in the desired position and solder both ends.

NOTE: Once a chip part has been removed, never use it again.

• **Transistor and Diode Replacement**

(1) Cut the terminals of the chip part with a nipper.
(2) Remove the cut leads.
(3) Make sure that there is no pattern peeling, damage and/or bridges around the desoldering positions.
(4) After removing the chip part, presolder the area, in which the new chip part is to be placed, with a thin layer of solder.
(5) Place new chip part in the desired position and solder the terminals.

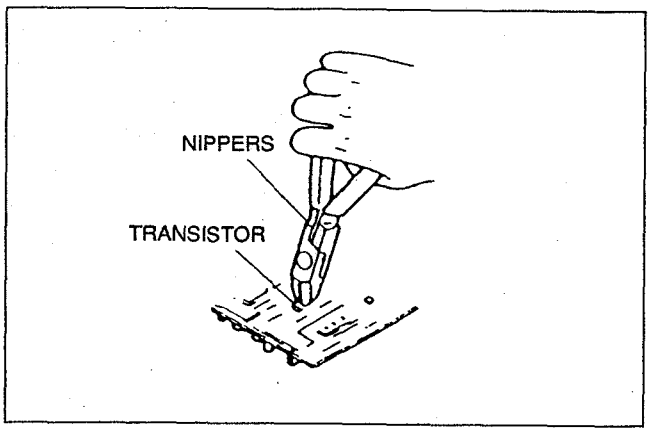

• **IC Replacement**

(1) Using the braided wire, "SOLDER TAUL" Sony Part No. 7-641-300-81, remove the solder around the pins of the IC-chip to be removed.
(2) While heating up the pins, remove the pins one by one using sharp-pointed tweezers.
(3) Make sure that there is no pattern peeling, damage and/or bridges around the desoldering positions.
(4) After removing the chip part, presolder the area, in which the new chip part is to be placed, with a thin layer of solder.
(5) Place new chip part in the desired position and solder the pins.

1-4-3. Removal of PLCC IC

The Extraction Tool is useful for removing the IC (PLCC type) inserted into an IC socket. This is useful for all sizes of ICs 20 pins through 124 pins.

Extraction Tool (for PLCC socket)
Sony Part No. J-6035-070-A

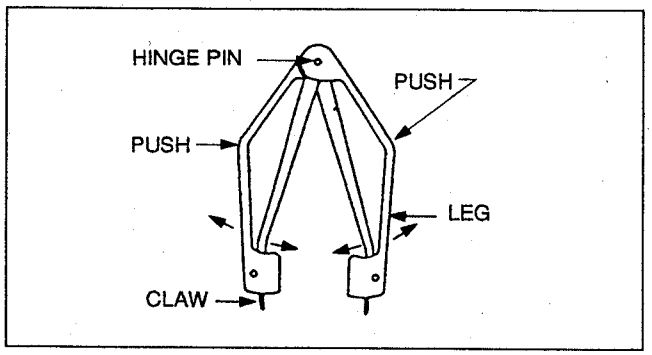

Note: • Never pull chips of IC upward with the Extraction Tool.
• Never hold the Extraction Tool on a strong force.

(1) Adjust which so that claws of the tool are matched to the socket of an IC.

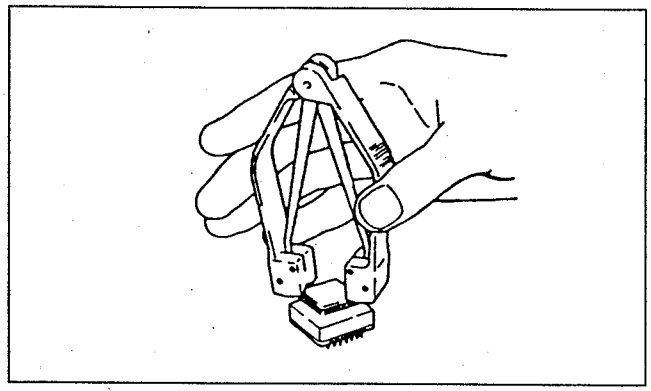

(2) Insert the claws of the tool into the slots of the socket, and then press the tool against the socket so that the A portion shown in the figure contact to the socket.

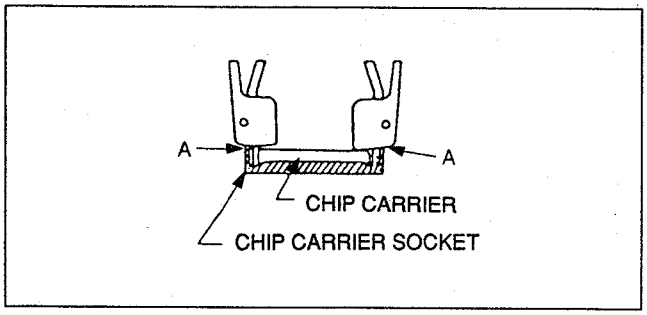

(3) Hold the tool as shown in the figure. The socket is pressed on a little force to downward.

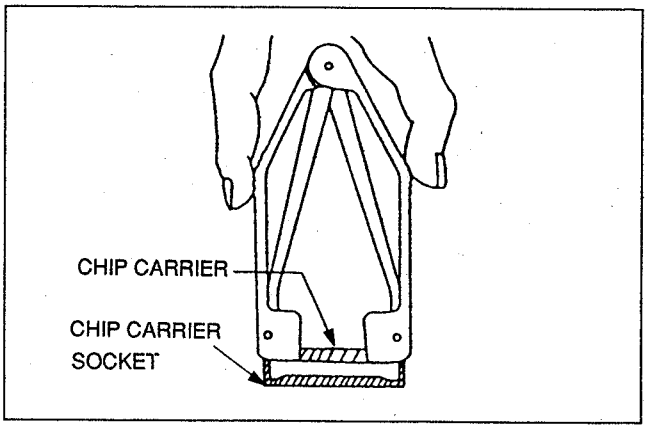

(4) Pinch the tool, so the legs of the tool are straightened. At that time, the claws pinch the chips of the IC and pull the IC upward.
(5) After pulling the IC, loosen the force of the fingers, and take off the chip.

SAFETY CHECK-OUT

After correcting the original service problem, perform the following safety checks before releasing the set to the customer:

Check the metal trim, "metallized" knobs, screws, and all other exposed metal parts for AC leakage. Check leakage as described below.

LEAKAGE TEST

The AC leakage from any exposed metal part to earth ground and from all exposed metal parts to any exposed metal part having a return to chassis, must not exceed 3.5mA. Leakage current can be measured by any one of three methods.

1. A commercial leakage tester, such as the Simpson 229 or RCA WT-540A. Follow the manufacturers' instructions to use these instruments.
2. A battery-operated AC milliammeter. The Data Precision 245 digital multimeter is suitable for this job.
3. Measuring the voltage drop across a resistor by means of a VOM or battery-operated AC voltmeter. The "limit" indication is 5.25V so analog meters must have an accurate low-voltage scale. The Simpson 250 and Sanwa SH-63Trd are examples of a passive VOM that is suitable. Nearly all battery operated digital multimeters that have a 20V AC range are suitable. (See Fig. A)

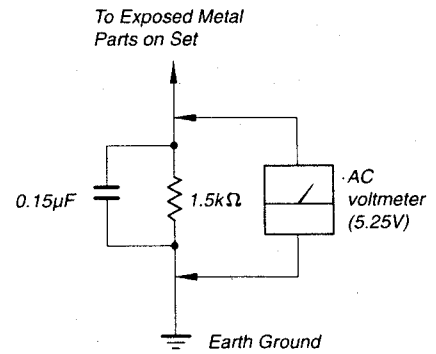

Fig. A. Using an AC voltmeter to check AC leakage.

CAUTION

Danger of explosion if battery is incorrectly replaced.

Replace only with the same or equivalent type recommended by the manufacturer. Dispose of used batteries according to the manufacturer's instructions.

SECTION 2
REPLACEMENT AND ADJUSTMENT OF MECHANISM DECK

2-1. REPLACEMENT OF MECHANICAL DECK ASSY AND PARTS

Replace the parts to replace periodically (refer to item "4-2" in Maintenance Manual Part 1) following the table below.

- The parts required to remove when replacing the parts to replace periodically are signified with "○".
- The figures in the circles signify the removing order of the parts required to remove.
- Assemble the parts in the reverse order of the removal. After replacement, proceed to "2-2. ALIGNMENT AND CHECK".

Note: Be sure to turn the POWER switch OFF during the operation.

Parts to Replace Periodically	Parts Required to Remove									
	RF SHIELD CASE (TOP)	CASSETTE WINDOW ASSY	MD SIDE PLATE (L) ①	MD SIDE PLATE (R)	RF-53 ASSY ②	FLEXIBLE SHIELD PLATE	SV-147 BOARD	MD SHIELD PLATE	CASSETTE COMPART-MENT ASSY	REEL MOTOR
MECHANICAL DECK (PLAYER) ASSY	—	—	—	—	—	—	—	—	—	—
MECHANICAL DECK (RECORDER) ASSY	—	—	—	—	—	—	—	—	—	—
DRUM ASSY (4ch) DOU-21A-R (PLAYER)	①	②	③	④	⑤	⑥	⑦	⑧	—	—
DRUM ASSY (2ch) DOU-22A-R (RECORDER)	①	②	③	④	⑤	⑥	⑦	⑧	—	—
CAPSTAN MOTOR U-21A	—	①	②	③	—	—	④	⑤	—	—
REEL MOTOR	—	①	②	③	—	—	④	⑤	—	—
PINCH ROLLER ASSY	—	①	②	③	—	—	④	⑤	⑥	⑦
DRIVE MOTOR ASSY	①	②	③	④	⑤	—	⑥	⑦	—	—
HC ROLLER	—	—	—	—	—	—	—	—	—	—
ROTARY ENCODER	—	①	②	③	—	—	④	⑤	—	—
CASSETTE COMPARTMENT ASSY	—	①	②	③	—	—	④	⑤	—	—

PROCEDURE

HC Roller, Mechanism Deck ASSY

Remove the top board.
(Refer to 1-1. "REPLACEMENT OF DC FAN MOTOR")
- Removing the HC roller.

Note: It is not necessary to remove the Mechanical Deck Assembly to replace the HC Roller.
When removing the HC roller, be careful not to scratch the drum.

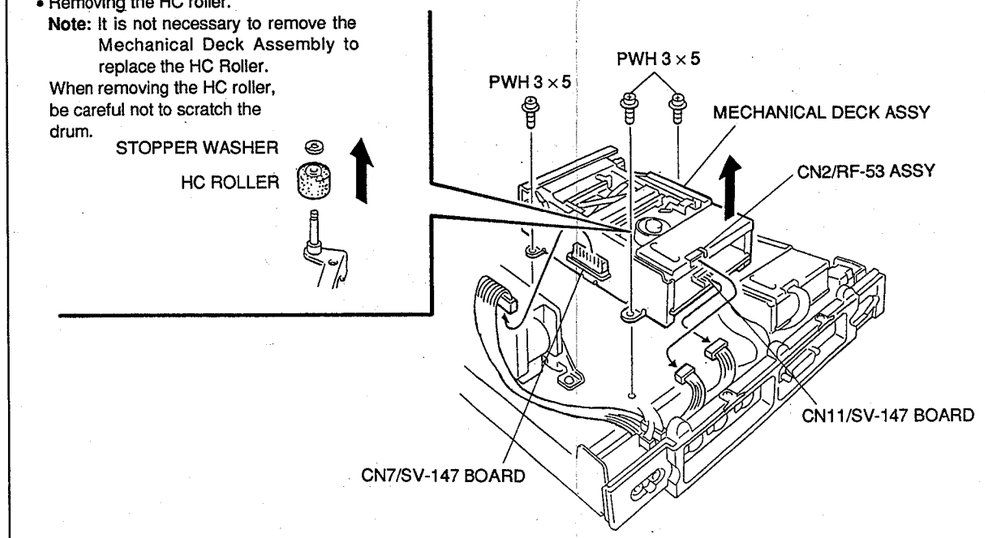

RF Shield Case (Top), Cassette Window ASSY, MD side Plate (L)/(R)

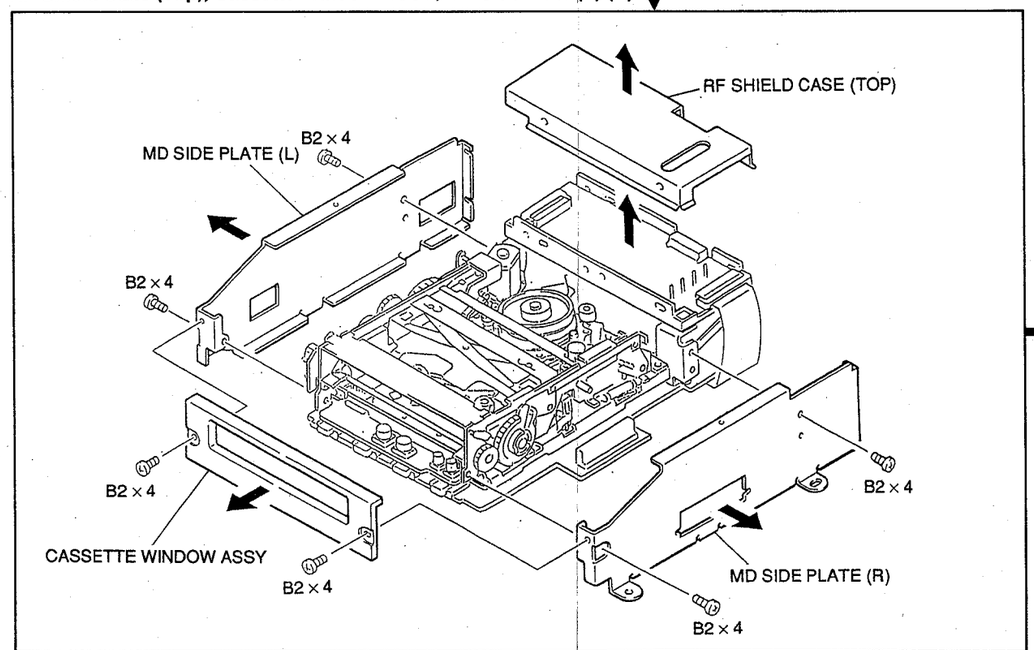

第2章
メカデッキの交換および調整

2-1. メカデッキASSY およびメカデッキ部品(定期交換部品)の交換方法

定期交換部品(MAINTENANCE MANUAL Part 1. "4-2."項参照)の交換は下表に従って行う。

- 定期交換部品を交換する際に、取り外す必要のある部品を○印で示す。
  また、○印の中の数字は、取り外しの必要な部品の取り外し順序を表す。
- 部品の組立ては取り外しの逆の手順で行う。交換後は "2-2.調整および確認"を行う。

注意：作業は、POWERスイッチをOFFにして行う。

定期交換部品	取り外しの必要な部品									
	RF シールドケース(上)	カセット窓 ASSY	MD 側板(L) ①	MD 側板(R)	RF-53 ASSY ②	フレキシールド板	SV-147 基板	MD シールド板	カセットコンパートメント ASSY	リールモーター
メカデッキ(PLAYER)ASSY	—	—	—	—	—	—	—	—	—	—
メカデッキ(RECORDER)ASSY	—	—	—	—	—	—	—	—	—	—
ドラムASSY(4ch) DOU-21A-R(PLAYER)	①	②	③	④	⑤	⑥	⑦	⑧	—	—
ドラムASSY(2ch) DOU-22A-R(RECORDER)	①	②	③	④	⑤	⑥	⑦	⑧	—	—
キャプスタンモータ、U-21A	—	①	②	③	—	—	④	⑤	—	—
リールモータ	—	①	②	③	—	—	④	⑤	—	—
ピンチローラASSY	—	①	②	③	—	—	④	⑤	⑥	⑦
ドライブモータASSY	①	②	③	④	⑤	—	⑥	⑦	—	—
HCローラー	—	—	—	—	—	—	—	—	—	—
ロータリーエンコーダー	—	①	②	③	—	—	④	⑤	—	—
カセットコンパートメント ASSY	—	①	②	③	—	—	④	⑤	—	—

手順

HCローラ、メカデッキASSY

・天板を外す。(1-1. DCファンモータの交換参照。)
・HCローラの取り外し
注意；HCローラの交換は、
メカデッキASSYを取り外す
必要はない。
HCローラを取り外す際は、ドラムに
傷を付けないよう注意する。

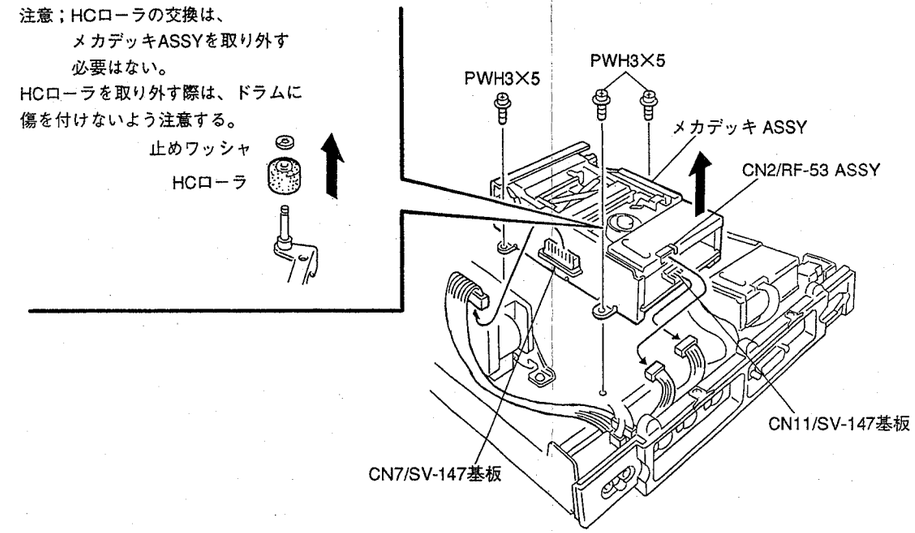

RFシールドケース(上)、カセット窓ASSY、MD側板(L)／(R)

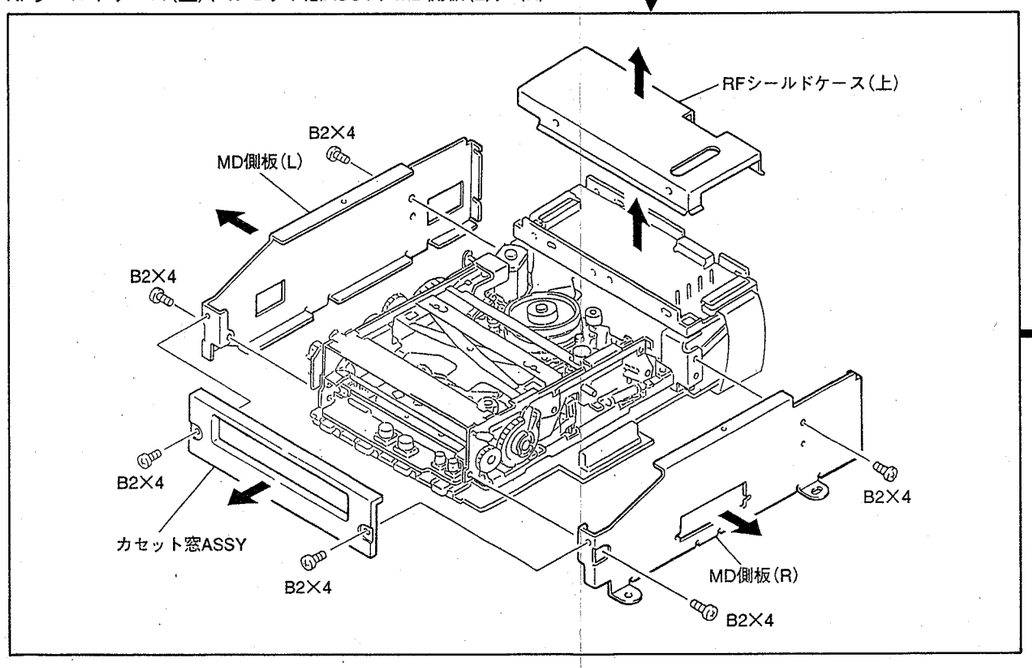

2-2. ADJUSTMENTS AND CHECKS

After replacing the mechanical deck assembly and its parts (parts to be replaced periodically), perform adjustments and checks according to the Table A (next page).
When performing the adjustments and checks, use the unit's built-in service menu and mount the mechanical deck assembly onto the unit.

Setting the Service Menu

(1) Set the BIT switches (S1) of the SV-147 board as follows.

S1/SV-147 board settings
S1-3 ; ON
S1-1, -2, -4 ; OFF

(2) Turn on the power switch.
(3) Press the [SHIFT] key + [MODE] key
(4) simultaneously.
(Setting the service menu)

EL display

```
SERVICE MENU

1  PLAYER MECHANICAL DECK ADJUSTMENT
2  RECORDER MECHANICAL DECK ADJUSTMENT
3  TEST.
4  INFORMATION

P-MD     R-MD     TEST     INFORM

F 1      F 2      F 3      F 4      F 5      F 6      F 7
```

Note: F1 to F7; Function keys

(4) When adjusting the PLAYER mechanical deck; Press the [F1] (P-MD) key.
When adjusting the RECORDER mechanical deck; Press the [F2] (R-MD) key.

EL display
(**Note:** The display is for RECORDER ADJUSTMENT)

```
RECORDER ADJUSTMENT
                                                SERVO BOARD BIT SW
▷1  SERVO DATA PRESET
 2  PLUNGER CHECK                               BIT1  OFF MAN EJECT
 3  MECHA DEVICE TEST                           BIT2  OFF EEPROM EN
 4  RECOGNITION SWITCH CHECK                    BIT3  ON  ERROR CUT
 5  END SENSOR LEVEL CHECK(HIGH)                BIT4  OFF ---------
 6  END SENSOR LEVEL CHECK(LOW)
 7  DEW SENSOR CHECK
 8  REEL TORQUE CHECK                              *
 9  FWD/RVS TORQUE ADJUSTMENT
10  DRAM/CAPSTAN SPEED & WOW CHECK

      MESSAGE

RECORDER: STOP
-------------------------------------------------------------
TEST ON   EXIT

F 1      F 2      F 3      F 4      F 5      F 6      F 7
```

*: Mode setting keys for SERVICE MENU.

Key	Mode
[SHUTTLE]:	STILL
[PREVIOUS]:	SHUTTLE–16
[NEXT]:	SHUTTLE+16
[PCM SEARCH]:	SHUTTLE–1
[LOCATE]:	SHUTTLE+1
[1]:	SHUTTLE–8
[2]:	SHUTTLE+8
[4]:	SHUTTLE–2
[5]:	SHUTTLE+2
[7]:	SHUTTLE–0.2
[8]:	SHUTTLE+0.2

(5) Using the [↑] and [↓] keys, select the desired adjustments according to Table A (select with the cursor "▷"), and perform "2-2-2. Adjustments and Checks in the Service Menu".

Exiting the Service Menu

(Returning to normal operations)

After the adjustments, carry out the following to return to the normal operation modes from the service menu.
(1) Set the BIT switches (S1) of the SV-147 board as follows.
S1-1, -2, -3, -4; All off
(2) Turn off the power switch of the unit.
(3) Turn on the power switch of the unit.

Table A: List of Adjustments

When the mechanical deck assembly and its parts (parts to be replaced periodically) have been replaced, the adjustments with the ○ must be performed.

Adjustments (Service Mode) \ Parts Replaced	Mechanical Deck Assembly	Drum Assembly	Cassette Compartment Assembly	Drive Motor Assembly	DC Motor Capstan	Reel Motor	Pinch Roller Assembly	Rotary Encoder	HC Roller	Others	
										SV-147 ASSY (RP)	RF-53 ASSY (RP)
1. SERVO DATA PRESET											
2. PLUNGER CHECK						○					
3. MECHANICAL DEVICE TEST		○	○	○	○	○	○	○	○	○	
4. RECOGNITION SWITCH CHECK							○	○			
5. END SENSOR LEVEL CHECK (HIGH)			○							○	
6. END SENSOR LEVEL CHECK (LOW)			○							○	
7. DEW SENSOR CHECK											
8. REEL TORQUE CHECK						○					
9. FWD/REV TORQUE ADJUSTMENT						○				○	
10. DRUM/CAPSTAN SPEED & WOW CHECK		○									
11. TAPE PATH ADJUSTMENT		○			○	○	○				
12. SWP POSITION ADJUSTMENT		○								○	
13. PATH & FF/REW TIME CHECK		○			○	○	○				
14. PB ERROR RATE CHECK	○	○			○	○	○			○	○
15. REC CURRENT ADJUSTMENT (LEADING)		○								○	○
16. REC CURRENT ADJUSTMENT (TRAILING)		○								○	○
17. REC/PB ERROR RATE CHECK	○	○								○	○
18. SERVO DATA SAVE		○				○				○	○
19. SERVO DATA DISPLAY											
2-2-3. Check when SV-147 board has been replaced										○	

2-2-1. Preparations

Equipment

Name	Specification	Equipment
Oscilloscope	• 4CH INPUT • DC to 150 MHz	TEKTRONIX 2445A or equivalent
Digital multimeter (Tester)	—	ADVANTEST R6341A or equivalent

Tools

Name	Parts No.	Remarks
Adjusting Screwdriver	J-6225-100-A	For fine tape path adjustments
RF LEVEL CHECKER PD-817	J-6228-170-A	For adjustments of recording and playback systems
I/F box PF-534 for the RF LEVEL CHECKER	J-6405-340-A	For PCM-E7700

Test Tapes and Torque Cassettes

Name	Parts No.	Remarks
Test tape TY-711DX	8-909-825-00	For playback level check
Test tape TY-7251	8-909-813-00	For tracking adjustments
Test tape TY-30BX	8-892-332-38	For recording level adjustments (Blank tape)
Test tape TY-7212	8-960-081-01	For error rate check
Torque cassette TW-7131	8-909-708-71	For FWD/REV torque adjustment
Torque cassette TW-7231	8-909-708-72	For FF/REW torque check

Use the following test tapes which are available on the market according to the table.

Name	Method of Use
Blank cassette	No tape (remodel available cassette tapes)
Test tape (01010)	Cassette tapes whose identification hole is as shown below (Remodel available DAT tapes) 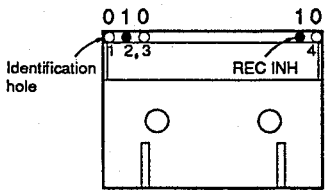 o : OPEN ● : CLOSE
Test tape (10101)	Cassette tapes whose identification hole is as shown below (Remodel the DAT tape available on the market) 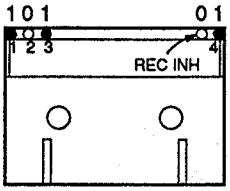 o : OPEN ● : CLOSE
Test tape (end sensor LOW)	Any 120 min. tape on the market (Use from around the middle of the tape)
Test tape (TOP)	Any 120 min. tape on the market (Use from around the top of the tape)
Test tape (END)	Any 120 min. tape on the market (Use from around the end of the tape)
Test tape (FF/REW TIME)	Any 30 min. tape on the market (Use after recording the whole tape)

2-2-2. Adjustments and Checks in the Service Menu

1. SERVO DATA PRESET

Normally, this adjustment and check need not be performed when mechanical deck parts (parts to be replaced periodically) have been replaced.

Note: If servo data preset has been performed by mistake, turn off the power switch of the unit and then turn it on again.

Equipment and Tools: Not required
Test Tape: Not required

Procedure	Checks
(1) Using the ↑ and ↓ keys, select "1. SERVO DATA PRESET". (2) Press the F1 (TEST ON) key. (3) MESSAGE: PRESETTING IS COMPLETED! will be displayed on the EL display. (4) Press F1 (TEST OFF) key. (Presetting ends) **Note:** Every time the F1 key is pressed once, the unit sets to the TEST OFF (on the display) from the TEST ON state.	EL Display **Note:** The preset value displayed on the display may differ according to the version of the ROM used. 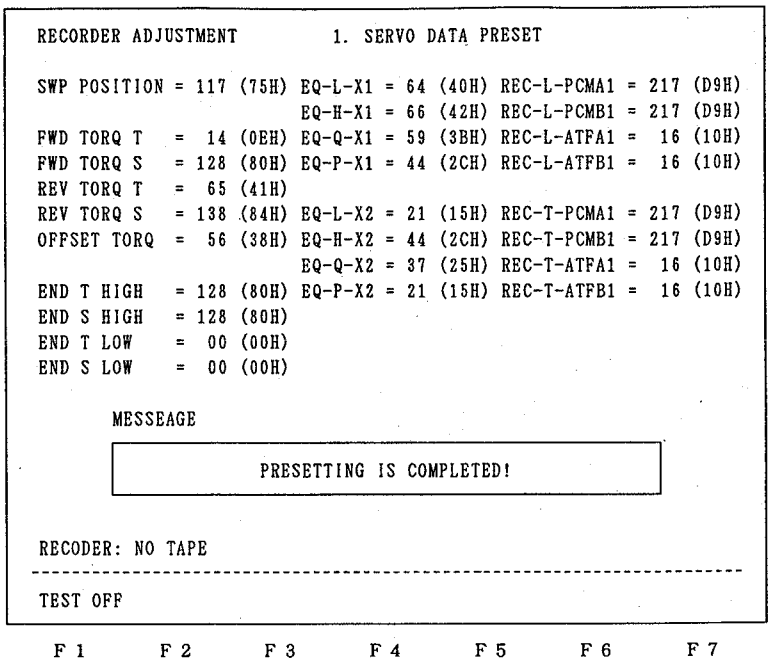

2. PLUNGER CHECK

Equipment and Tools: Not required
Test Tape: Not required

Procedure	Checks
(1) Using the ⇧ and ⇩ keys, select "2. PLUNGER CHECK". (2) Press the F1 (TEST ON) key. (3) Check the sound produced when the plunger starts operating. Check the results displayed on the EL display. (4) Press F1 (TEST OFF) key.	EL Display 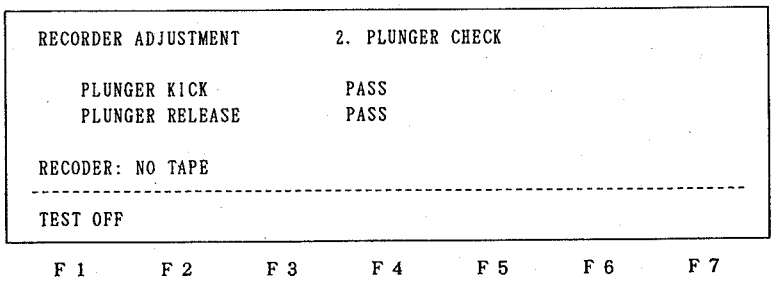 Results Displayed: PASS...Normal FAULT...Failure

3. MECHANICAL DEVICE TEST

Equipment and Tools: Not required
Test Tape: Blank cassette (Refer to "2-2-1. Preparations".)

Procedure	Checks
(1) Using the ⇧ and ⇩ keys, select "3. MECHANICAL DEVICE TEST". (2) Press the F1 (TEST ON) key. (3) Insert the blank cassette. The mechanical device test will be carried out and the results will be displayed on the display. After the display, the blank cassette will automatically be ejected. (4) After checking the display, press the F1 (TEST OFF) key.	EL Display 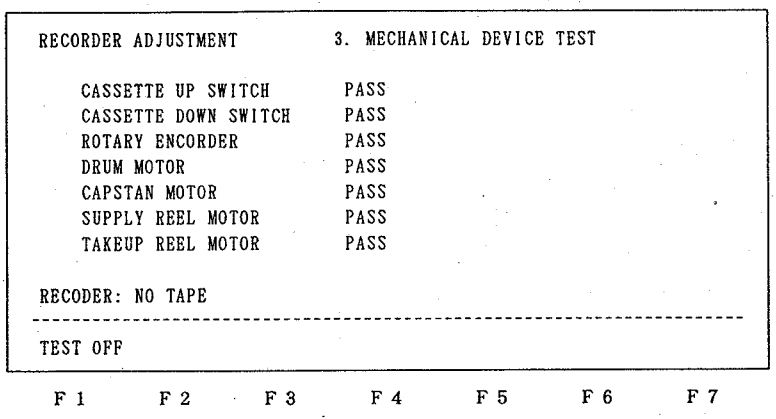 Results Displayed: PASS...Normal FAULT...Failure **Note:** When the mechanical device test mode has been set, until it has been executed, the next mode cannot be set.

4. RECOGNITION SWITCH CHECK

Equipment and Tools: Not required
Test Tape: Test tape (01010) (Refer to "2-2-1. Preparations".)
Test tape (10101) (Refer to "2-2-1. Preparations".)

Procedure	Checks/Specifications
(1) Using the ↑ and ↓ keys, select "4. RECOGNITION SWITCH CHECK". (2) Press the F1 (TEST ON) key. (3) Insert the test tape (01010). Check that the results on the EL display and the identification hole of the test tape (01010) match.	EL display RECORDER ADJUSTMENT 4. RECOGINITION SWITCH CHECK HOLE-1(RESERVED) OPEN (0) HOLE-2(THIN) CLOSE (1) HOLE-3(WIDE) OPEN (0) HOLE-RECINH CLOSE (1) HOLE-4(SOFT TAPE) OPEN (0) RECODER: SBOFF TEST OFF F1 F2 F3 F4 F5 F6 F7 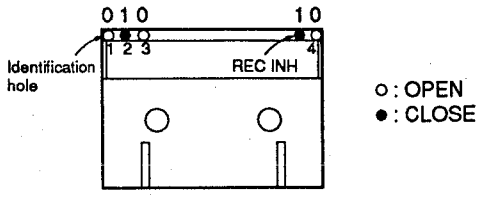
(4) Press the EJECT key and eject the test tape (01010). (5) Insert the test tape (10101). Check that the results on the EL display and the identification hole of the test tape (10101) match.	EL display RECORDER ADJUSTMENT 4. RECOGINITION SWITCH CHECK HOLE-1(RESERVED) CLOSE (1) HOLE-2(THIN) OPEN (0) HOLE-3(WIDE) CLOSE (1) HOLE-RECINH OPEN (0) HOLE-4(SOFT TAPE) CLOSE (1) RECODER: SBOFF TEST OFF F1 F2 F3 F4 F5 F6 F7 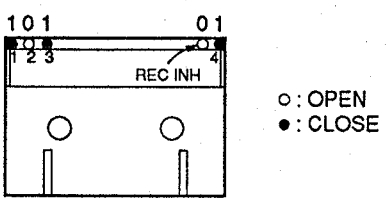
(6) Press the PLAY key.	**Check:** ① Check that the cleaning roller touches the drum and moves away immediately. ② Check that the pinch roller presses against the capstan shaft and rotates.

(7) Press the STOP key.	**Check:** Check where the pinch roller stops. **Specification:** Gap between capstan shaft and pinch roller = 1.5 mm to 2.5 mm 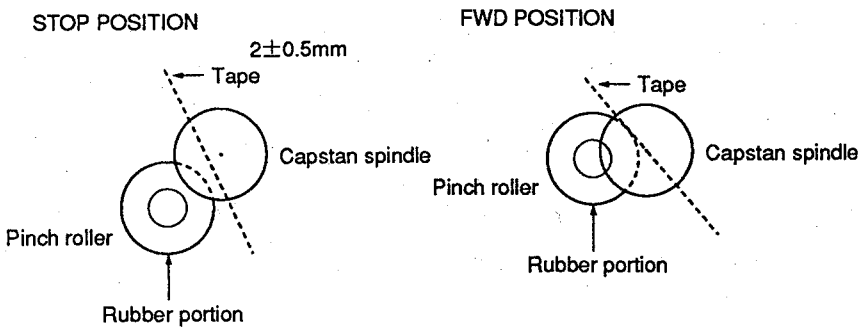 Check that the distance between the capstan spindle and the pinch roller is in the range of 1.5 to 2.5mm. (In this position, the rubber portion of the pinch roller is hidden under the capstan spindle cover.)
(8) Press the F1 (TEST OFF) key. The test tape (10101) will be ejected automatically.	

5. END SENSOR LEVEL CHECK (HIGH)

Equipment and Tools: Not required
Test Tape: Blank cassette (Refer to "2-2-1. Preparations")

Procedure	Checks/Specifications
(1) Using the ↑ and ↓ keys, select "5. END SENSOR LEVEL CHECK (HIGH)". (2) Press the F1 (TEST ON) key. (3) Insert the blank cassette. The sensor level will be displayed on the EL display. Check that the sensor level satisfies the specification. (4) Press the F1 (TEST OFF) key. The cassette will be ejected automatically.	EL display RECORDER ADJUSTMENT 5. END SENSOR LEVEL CHECK(HIGH) T-END SENSOR LEVEL = X.XX V (XXH) S-END SENSOR LEVEL = X.XX V (XXH) RECODER: SBOFF TEST OFF F 1 F 2 F 3 F 4 F 5 F 6 F 7 **Specification:** Sensor level: 1.0 V and higher

6. END SENSOR LEVEL CHECK (LOW)

Equipment and Tools: Not required
Test Tape: Test tape (end sensor (LOW)) (Refer to "2-2-1. Preparations".)

Procedure	Checks/Specifications
(1) Using the ↑ and ↓ keys, select "6. END SENSOR LEVEL CHECK (LOW)". (2) Press the F1 (TEST ON) key. (3) Insert the test tape (end sensor (LOW)). **Note:** Use the test tape (end sensor (LOW)) around the center of the take up side. The sensor level will be displayed on the EL display. Check that the sensor level satisfies the specification. (4) Press F1 (TEST OFF) key. The tape will be ejected automatically.	EL Display 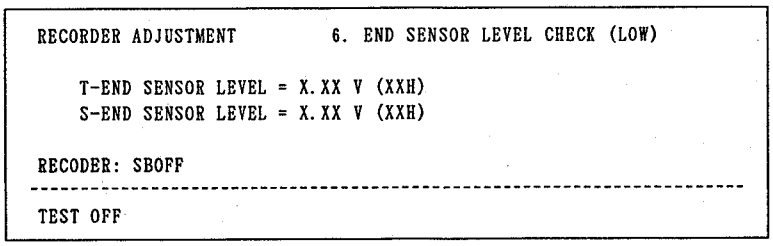 **Specification:** Sensor level = Less than or equal 0.2V

7. DEW SENSOR CHECK

Equipment and Tools: Not required
Test Tape: Not required

Procedure	Checks/Specifications
(1) Using the ↑ and ↓ keys, select "7. DEW SENSOR CHECK". (2) Press the F1 (TEST ON) key. The sensor level will be displayed on the EL display. Check that the sensor level satisfies the specification. (3) Press the F1 (TEST OFF) key.	EL Display 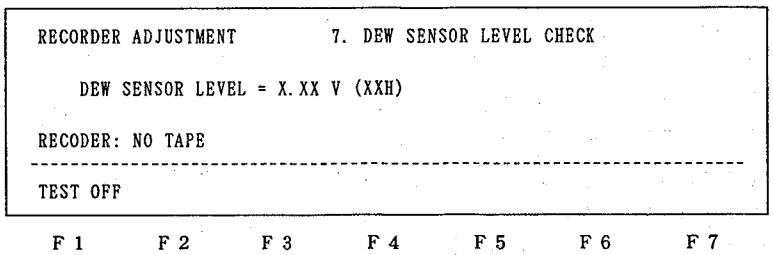 **Specification:** Sensor level = 0.1 V <u>≤X.XX V≤</u>0.4 V Displayed level

8. REEL TORQUE CHECK

Equipment and Tools: Not required
Test Tape: Torque cassette TW-7231

Procedure	Checks/Specifications
(1) Using the ↑ and ↓ keys, select "8. REEL TORQUE CHECK". (2) Press the F1 (TEST ON) key. (3) Insert the torque cassette (TW-7231).	EL Display (TEST ON display) RECORDER ADJUSTMENT 8. REEL TORQUE CHECK CHECK OFF ⇨REEL TORQUE CHECK FF L(1.5V) CHECK OFF REEL TORQUE CHECK REW L(1.5V) CHECK OFF REEL TORQUE CHECK FF H(4.3V) CHECK OFF REEL TORQUE CHECK FF L(4.3V) CHECK OFF OFFSET TORQUE RECODER: SBOFF TEST OFF F1 F2 F3 F4 F5 F6 F7
(4) Using the ↑ and ↓ keys, select "REEL TORQUE CHECK FF L". Check that the torque value of the torque cassette (T-side reel) satisfies the specification (shown on the right side).	**Note:** T = TAKE UP reel side, S = SUPPLY reel side **Specification:** T-REEL torque = 0.0004 to 0.001 N·m (4 to 10 g·cm)
(5) Using the ↑ and ↓ keys, select "REEL TORQUE CHECK REW L". Check that the torque value of the torque cassette (S-side reel) satisfies the specification (shown on the right side).	**Specification:** S-REEL torque = 0.0004 to 0.001 N·m (4 to 10 g·cm)
(6) Using the ↑ and ↓ keys, select "REEL TORQUE CHECK FF H". Check that the torque value of the torque cassette (T-side reel) satisfies the specification (shown on the right side).	**Specification:** T-REEL torque = 0.0026 N·m and higher (26 g·cm and higher)
(7) Using the ↑ and ↓ keys, select "REEL TORQUE CHECK REW H". Check that the torque value of the torque cassette (S-side reel) satisfies the specification (shown on the right side).	**Specification:** S-REEL torque = 0.0026 N·m and higher (26 g·cm and higher)
(8) Press the F1 (TEST OFF) key. The torque cassette will be ejected automatically.	

9. FWD/REV TORQUE ADJUSTMENT

Equipment and Tools: Not required
Test Tape: Torque cassette TW-7131

Procedure	Checks/Specifications
(1) Using the ↑ and ↓ keys, select "9. FWD/REV TORQUE ADJUSTMENT". (2) Press the F1 (TEST ON) key. (3) Insert the torque cassette (TW-7131).	EL Display (TEST ON display) RECORDER ADJUSTMENT 9. FWD/RVS TORQUE ADJUSTMENT ⇨FWD T-REEL TORQUE = XXX (XXH) FWD S-REEL TORQUE = XXX (XXH) REV T-REEL TORQUE = XXX (XXH) REV S-REEL TORQUE = XXX (XXH) OFFSET TORQUE = XXX (XXH) RECODER: PLAY TEST OFF ↑ ↓ F 1 F 2 F 3 F 4 F 5 F 6 F 7
(4) Using the ↑ and ↓ keys, select "FWD T-REEL TORQUE". (5) Press the PLAY key.	**Specification:** T-REEL torque = 0.0050 ± 0.0005 N•m (5.0 ± 0.5 g•cm) **Adjustment:** Use the F6 (UP) and F7 (DOWN) keys.
(6) Using the ↑ and ↓ keys, select "FWD S-REEL TORQUE".	**Specification:** S-REEL torque = 0.0065 ± 0.0005 N•m (6.5 ± 0.5 g•cm) **Adjustment:** Use the F6 (UP) and F7 (DOWN) keys.
(7) Using the ↑ and ↓ keys, select "REV T-REEL TORQUE". (8) Press SHUTTLE (–1) (PGM SEARCH key).	**Specification:** T-REEL torque = 0.013 ± 0.001 N•m (13 ± 1 g•cm) **Adjustment:** Use the F6 (UP) and F7 (DOWN) keys.
(9) Using the ↑ and ↓ keys, select "REV S-REEL TORQUE".	**Specification:** S-REEL torque = 0.008 ± 0.001 N•m (8 ± 1 g•cm) **Adjustment:** Use the F6 (UP) and F7 (DOWN) keys.
(10) Press the F1 (TEST OFF) key. The torque cassette (TW-7131) will be ejected automatically.	

10. DRUM/CAPSTAN SPEED & WOW CHECK (10. Correct Rotation Check)

Equipment and Tools: Not required
Test Tape: Blank cassette (Refer to "2-2-1. Preparations".)

Procedure	Checks/Specifications
(1) Using the ↑ and ↓ keys, select "10. DRUM/CAPSTAN SPEED & WOW CHECK". (2) Press the F1 (TEST ON) key. (3) Insert the blank cassette.	EL Display RECORDER ADJUSTMENT 10. DRUM/CAPSTAN SPEED & WOW CHECK DRUM SPEED =2000 rpm RECODER: PLAY TEST OFF SPEED F 1 F 2 F 3 F 4 F 5 F 6 F 7
(4) Press the PLAY key.	**Check:** While rotating the drum in the clockwise direction slowly, check that the drum rotates correctly. (When the drum is stopped with your finger, it must rotate when you release your finger regardless of its position.)

11. TAPE PATH ADJUSTMENT

Equipment and Tools:

Oscilloscope
Adjusting screwdriver (J-6225-100-A)

Test Tape:

Test tape TY-7251

Connection

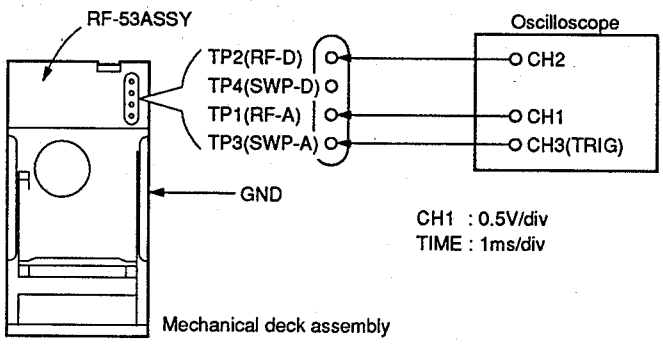

Procedure	Checks/Specifications
(1) Connect the oscilloscope to the following points of the RF-53 assembly. Oscilloscope RF-53 assembly CH1 → TP1 (RF-A) CH2 → TP2 (RF-D) (Only the recorder) CH3 → TP3 (SWP-A, TRIG) Connect the GND to the metal plate, etc. of the mechanism deck. (2) Using the ↑ and ↓ keys, select "11. TAPE PATH ADJUSTMENT". (3) Press the F1 (TEST ON) key. (4) Insert the test tape (TY-7251).	EL Display RECORDER ADJUSTMENT 11. TAPE PATH ADJUSTMENT ATF OFFSET = 0% RECODER: PLAY TEST OFF 0% 50% 100% F1 F2 F3 F4 F5 F6 F7
(5) Press the PLAY key.	**Specification:** Adjust the RF waveform (TP1) so that it becomes square. RF waveform (TP1) 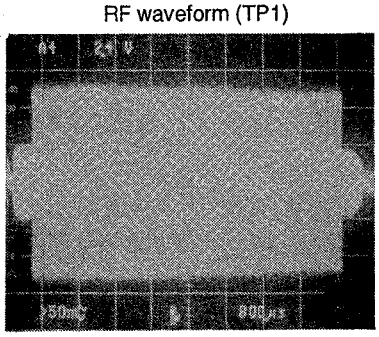 **Adjustment:** Adjust the height of the S1 and T1 guides finely with the adjusting screwdriver (J-6225-100-A).

(6) Press the [F5] (100%) key. (ATF OFF)	**Check:** Check that the RF waveform (TP1) changes parallel. 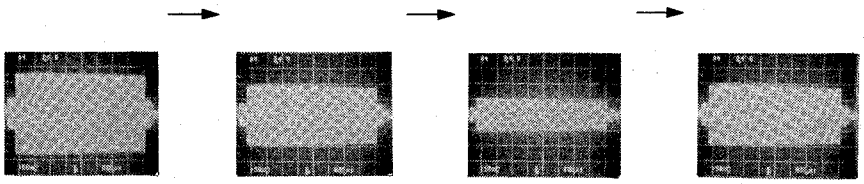 **Adjustment:** Adjust the height of the S1 and T1 guides so that the RF waveform changes parallel.
(7) Press the [F4] (50%) key. (ATF OFFSET)	**Check:** Check that the RF waveform (TP1) satisfies the following specification. **Specification:** The RF waveform becomes rectangular at its 50% height. Distortion including fluctuations should be within 10% against the flat part. 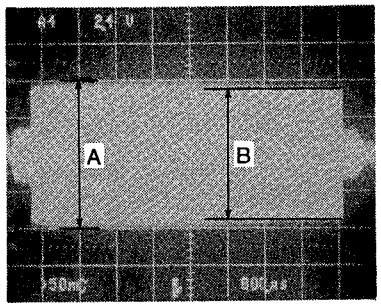 RF waveform (TP1) **Specification:** $\frac{B}{A} \times 100(\%) \geqq 80\%$
(8) Press the [F3] (0%) key. (ATF ON) (9) Press the SHUTTLE (–16) ([PREVIOUS] key). (10) Check the rising time of the RF waveform when press the [PLAY] key.	**Check (specification):** The RF waveform (TP1) becomes stable within two seconds.
(11) Press the [EJECT] key and eject the test tape. (12) Insert the test tape (TY-7251), press the [PLAY] (PLAY mode) key, and check the rising time of the RF waveform (PLAY mode).	**Check (Specification):** The RF waveform becomes stable within 2 seconds.
(13) Press the [F1] (TEST OFF) key. The test tape (TY-7251) will be ejected automatically.	
(14) Adjust the height of S1 guide for the PLAYER mechanical deck.	**Adjustment:** Rotate the S1 guide 30° in the counterclockwise direction using the adjustment driver (J-6225-100-A). 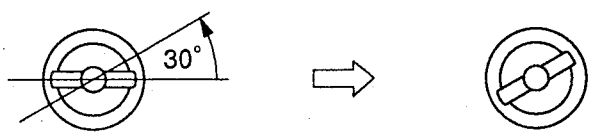 **S1 guide**

12. SWP POSITION ADJUSTMENT

Equipment and Tools:
Oscilloscope

Test Tape:
Test tape TY-7251

Connection
Same as "11. TAPE PATH ADJUSTMENT".

Procedure	Adustments/Checks/Specifications
(1) Connect the oscilloscope to the following points of the RF-53 assembly. Oscilloscope RF-53 ASSY CH1 → TP1 (RF-A) CH2 → TP2 (RF-D) (Only the recorder) CH3 → TP3 (SWP-A, TRIG) (2) Press the [F1] (TEST ON) key. (3) Insert the test tape (TY-7251).	EL Display RECORDER ADJUSTMENT 12. SWP POSITION ADJUSTMENT SWP POSITION = XXX (XXH) RECODER: PLAY TEST OFF ↑ ↓ F1 F2 F3 F4 F5 F6 F7
(4) Press the [PLAY] key. Adjust the SWP position with the [F6] (UP) key and [F7] (DOWN) key.	**Specification:** Time (T) between the falling edge of the SWP and the falling edge of the marker of the RF waveform T = 650 ± 15 µs 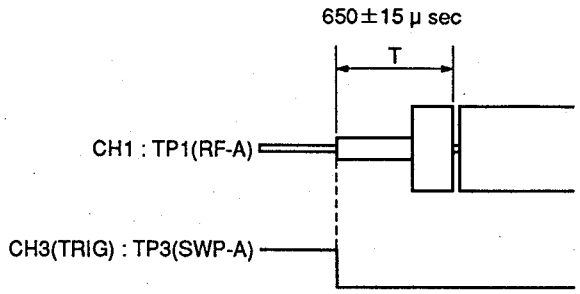 **Adjustment:** Press the [SHIFT] key + [F6] (UP) key or the [F7] (DOWN) key. (Adjustment consisting of ten steps at a time) Press the [F6] (UP) key or [F7] (DOWN) key. (Adjustment consisting of one step at a time)
(5) Press the [F1] (TEST OFF) key. The test tape (TY-7251) will be ejected automatically.	

13. PATH & FF/REW TIME CHECK

Equipment and Tools:
Oscilloscope

Test Tape:
Test tape (TOP) (Refer to "2-2-1. Preparations".)
Test tape (END) (Refer to "2-2-1. Preparations".)
Test tape (FF/REW TIME) (Refer to "2-2-1. Preparations".)

Connection
Same as "11. TAPE PATH ADJUSTMENT".

Procedure	Adjustments/Checks/Specifications
(1) Connect the oscilloscope to the following points of the RF-53 assembly. Oscilloscope — RF-53 ASSY CH1 → TP1 (RF-A) CH3 → TP3 (SWP-A, TRIG) (2) Using the ↑ and ↓ keys, select "13. FF/REW TIME CHECK". (3) Press the F1 (TEST ON) key. (4) Insert the test tape (TOP).	EL Display 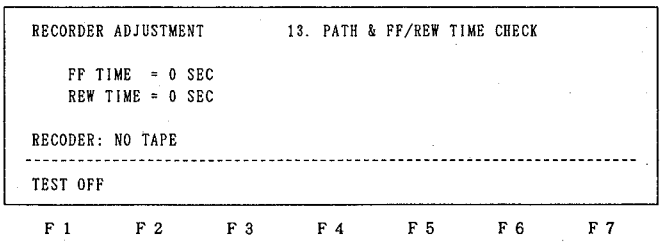
(5) Repeat pressing SHUTTLE (+1) (LOCATE key) and SHUTTLE (–1) (PGM SEARCH key) alternately. Check that the tape running satisfies the specification.	**Specification:** The tape should not be curled and not come off the guides before and after the pinch roller.
(6) Repeat pressing SHUTTLE (+16) (NEXT key) and SHUTTLE (–16) (PREVIOUS key) alternately. Check that the tape running satisfies the specification.	**Specification:** The tape should not be curled and not come off the guides before and after the pinch roller.
(7) Press the EJECT key and eject the test tape (TOP). (8) Insert the test tape (END). (9) Repeat pressing SHUTTLE (+1) (LOCATE key) and SHUTTLE (–1) (PGM SEARCH key) alternately. Check that the tape running satisfies the specification.	**Specification:** The tape should not be curled and not come off the guides before and after the pinch roller.

(10) Repeat pressing SHUTTLE (+16) (NEXT key) and SHUTTLE (–16) (PREVIOUS key) alternately. Check that the tape running satisfies the specification.	**Specification:** The tape should not be curled and not come off the guides before and after the pinch roller.
(11) Press the EJECT key and eject the test tape (END). (12) Insert the test tape (FF/REW TIME). (13) Fast forward and rewind the tape with the REW key or FF key and check that the tape rewind time satisfies the specification.	**Specification:** Take up time of tape fast forwarded = Less than 20 seconds. Take up time of tape rewound = Less than 20 seconds. Check with the RF waveform of the oscilloscope that the tape contacts the head correctly during FF and REW.
(14) Press the F1 (TEST OFF) key. The test tape (FF/REW TIME) will be ejected automatically.	

14. PB ERROR RATE CHECK

Equipment and Tools: *Oscilloscope*
Test Tape: Test tape TY-7212

Note: 1. Be sure to mount the top plate when measuring the error rate.
2. Before performing checks, use the cleaning tape and clean for ten seconds.

Procedure	Adjustments/Checks/Specifications
(1) Using the ↑ and ↓ keys, select "14. PB ERROR RATE CHECK". (2) Press the F1 (TEST ON) key. (3) Insert the test tape (TY-7212).	EL Display RECORDER ADJUSTMENT 14. PB ERROR RATE CHECK ⇨EQ-X1-L = 64 (40H) PB SPEED X1 EQ-X1-H = 66 (42H) EQ-X1-Q = 59 (3BH) PB HEAD LEADING EQ-X1-P = 44 (2CH) ERROR RATE A-CH X.XE-X B-CH X.XE-X EQ-X2-L = 21 (15H) EQ-X2-H = 44 (2CH) EQ-X2-Q = 37 (25H) EQ-X2-P = 21 (15H) RECODER: PLAY TIME CODE: 0 0 : 1 0 : 5 8 : 4 0 TEST OFF HEAD ↑ ↓ F 1 F 2 F 3 F 4 F 5 F 6 F 7
(4) Press the PLAY key and check that the specification is satisfied.	**Specification:** Playback error rate A-CH = Less than or equal 5×10 (Display: Less than or equal 5E-3) Playback error rate B-CH = Less than or equal 5×10 (Display: Less than or equal 5E-3)

(5) Press the [STOP] key. (6) Using the [↑] and [↓] keys, select "EQ-X2-L". (Normal speed × 2 mode) (7) Press the [PLAY] key and check that the specification is satisfied.	**Specification:** Playback error rate A-CH = Less than or equal 5 × 10 (Display: Less than or equal 5E-3) Playback error rate B-CH = Less than or equal 5 × 10 (Display: Less than or equal 5E-3)
(8) Press the [STOP] key. **Note:** Press the [F1] (TEST OFF) key for the PLAYER deck. The test tape will be ejected automatically. (End of check for the PLAYER deck)	
The following check is for the RECORDER deck only. (9) Press the [F4] (HEAD) key and check that "PB HEAD TRAILING" is displayed. (10) Press the [PLAY] key and check that the specification is satisfied.	**Specification:** Playback error rate A-CH = Less than or equal 5 × 10 (Display: Less than or equal 5E-3) **Specification:** Playback error rate B-CH = Less than or equal 5 × 10 (Display: Less than or equal 5E-3)
(11) Press the [STOP] key. (12) Using the [↑] and [↓] keys, select "EQ-X1-P". (Normal speed mode) (13) Press the [PLAY] key and check that the specification is satisfied.	**Specification:** Playback error rate A-CH = Less than or equal 5 × 10 (Display: Less than or equal 5E-3) Playback error rate B-CH = Less than or equal 5 × 10 (Display: Less than or equal 5E-3)
(14) Press the [STOP] key. (15) Connect the oscilloscope to the following points of the RF-53 assembly. Oscilloscope RF-53 ASSY 〈 For RECORDER 〉 CH1 → TP2 (RF-D) CH3 → TP4 (SWP-D, TRIG) 〈 For PLAYER 〉 CH1 → TP1 (RF-A) CH3 → TP3 (SWP-A, TRIG) (16) Press the SHUTTLE (–2) ([4] key).	**Check:** Check that the RF waveform (TP-2) satisfies the following specification. **Specification:** The RF waveform rises within two seconds. CH1 : TP2(RF-D) or TP1(RF-A) 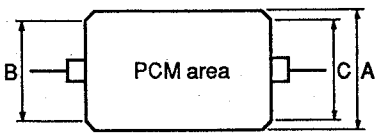 $\frac{B}{A} \geqq \frac{5}{10}$ $\frac{C}{A} \geqq \frac{5}{10}$ Check that the waveform is stable for ten seconds.
(17) Press the [REW] key. (18) Press the SHUTTLE (–2) ([4] key).	Check that the above specifications are satisfied.
(19) Press the [F1] (TEST OFF) key. The test tape (TY-7212) will be ejected automatically.	

15. REC CURRENT ADJUSTMENT (LEADING) (RECORDER deck only)

Equipment and Tools:

Oscilloscope
RF level checker PD-817
I/F box PF-534 for the RF level checker

Test Tape:

Test tape TY-7111DX
Test tape TY-30BX

Connection

Connect the parts with the power switch of PCM-E7700 off.
Remove the key panel assembly when connecting the RF-534 cable (15P) to CN302 on the SSP-8 board.
When performing adjustments, make sure that the cable (15P) is not caught and the key panel assembly is attached to the unit.

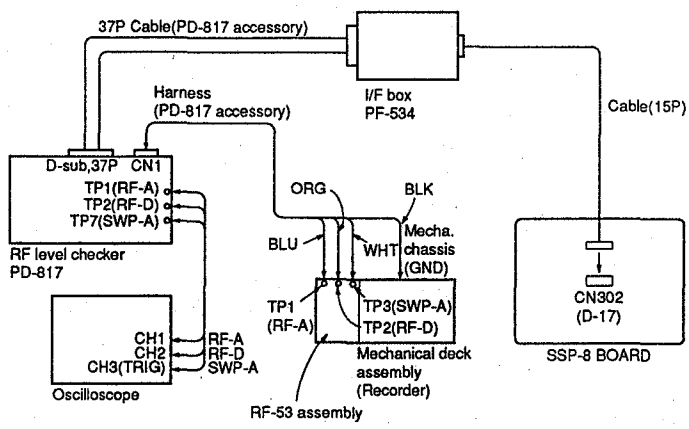

Procedure	Adjustments/Checks/Specifications
(1) Using the ↑ and ↓ keys, select "15. REC CURRENT ADJUSTMENT (LEADING)". (2) Press the [F1] (TEST ON) key. (3) Insert the test tape (TY-7111DX). (4) According to the calibration values table attached to the test tape, set the calibration value with the OFF SET dial of the RF level checker (PD-817). (5) Press the [PLAY] key. Check that the RF waveform (oscilloscope) is stable. (6) Press the [CAL] key of the RF level checker (PD-817). (7) After completing CAL, and the LED of the [CAL] key stops blinking and lights up, press the [EJECT] key and eject the test tape (TY-7111DX).	EL Display RECORDER ADJUSTMENT 15. REC CURRENT ADJUSTMENT(LEADING) REC CURRENT PCM-A XXX (XXH) REC CURRENT PCM-B XXX (XXH) REC CURRENT ATF-A XXX (XXH) REC CURRENT ATF-B XXX (XXH) RECODER: REC TIME CODE: 00:10:58:40 TEST OFF ↑ ↓ F1 F2 F3 F4 F5 F6 F7

(8) Insert the test tape (TY-30BX, blank area). (9) Press the [LEADING (A/B)] key of the RF level checker (PD-817). The PCM/ATF (Ach, Bch) recording current level of the leading head will be measured automatically (Self recording and playback). (10) After measuring, the indicator of the [LEADING] key will stop blinking and light up and the recording level will be displayed on the level meter of the RF level checker. Repeat steps (8), (9), and (10) so that the recording level satisfies the specification.	**Specification:** PCM-A and PCM-B recording level = 0.5 ± 0.5 dB ATF-A and ATF-B recording level = −0.5 ± 0.5 dB RF Level Checker Level Meter Display 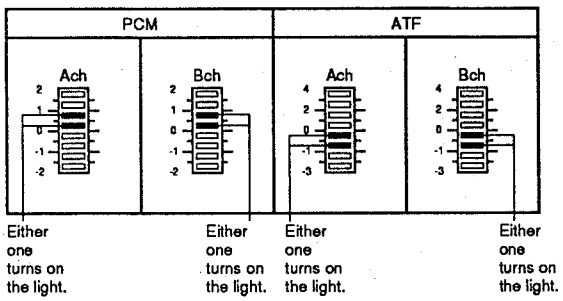 **Adjustment:** Using the ↑ and ↓ keys, select values that do not satisfy the specification, and adjust with the [F6] and [F7] keys as follows. To raise the recording level:Press the [F6] (UP) key To lower the recording level:Press the [F7] (DOWN) key
(11) Press the [F1] (TEST OFF) key. The test tape (TY-30BX) will be ejected automatically.	

*1: Setting of the offset dial

According to the table of calibration values attached to the test tape (TY-7111DX), set the calibration values of the 1.57 MHz and 130 kHz Ach/Bch with the RF level checker offset dial.

Setting Example
Display of Calibration Values

	130.7 (kHz)	1.568 (MHz)
Ach	0.1	−0.3
Bch	+0.2	+0.2

Setting the offset dial (For the above calibration values)

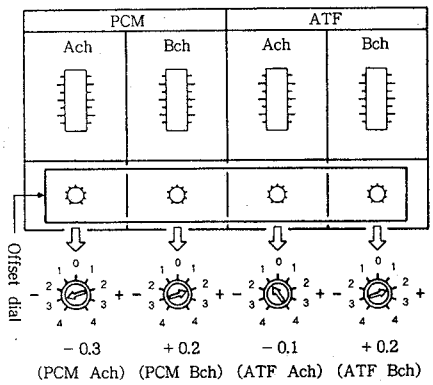

16. REC CURRENT ADJUSTMENT (TRAILING) (RECORDER deck only)

Equipment and Tools:

Oscilloscope
RF level checker PD-817
I/F box PF-534 for the RF LEVEL CHECKER

Test Tape:

Test tape TY-30BX
Test tape TY-7111DX

Connection

Same as "15. REC CURRENT ADJUSTMENT (LEADING)".

Procedure	Adjustments/Checks/Specifications
(1) Using the ↑ and ↓ keys, select "16. REC CURRENT ADJUSTMENT (TRAILING)". (2) Press the F1 (TEST ON) key. (3) Insert the test tape (TY-7111DX). (4) According to the table of calibration values attached to the test tape, set the calibration value with the OFF SET dial of the RF level checker (PD-817). *1 (Refer to page 2-22). (5) Press the PLAY key. Check that the RF waveform (oscilloscope) is stable. (6) Press the CAL key of the RF level checker (PD-817). (7) After completing CAL, and the LED of the CAL key stops blinking and lights up, press the EJECT key and eject the test tape.	EL Display RECORDER ADJUSTMENT 16. REC CURRENT ADJUSTMENT(TRAILING) REC CURRENT PCM-A XX REC CURRENT PCM-B XX REC CURRENT ATF-A XX REC CURRENT ATF-B XX RECODER: REC TIME CODE: 00:10:58:40 TEST OFF ↑ ↓ F1 F2 F3 F4 F5 F6 F7

(8) Insert the test tape (TY-30BX, blank area). (9) Press the [TRAILING (A/B)] key of the RF level checker (PD-817). The PCM/ATF (Ach, Bch) recording current level of the trailing head will be measured automatically (Self recording and playback). (10) After measuring, the indicator of the [TRAILING] key will stop blinking and light up and the recording level will be displayed on the level meter of the RF level checker. Repeat steps (8), (9), and (10) so that the recording level satisfies the specification.	Specification: PCM-A and PCM-B recording level = 0.5 ± 0.5 dB ATF-A and ATF-B recording level = – 0.5 ± 0.5 dB RF Level Checker Level Meter Display 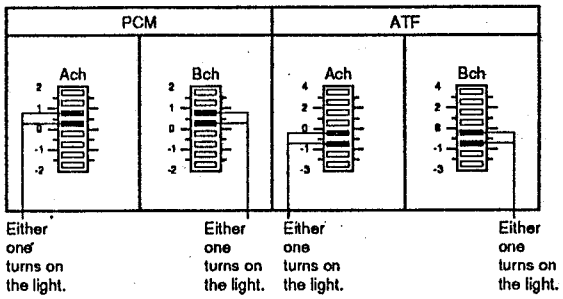 **Adjustment:** Using the [↑] and [↓] keys, select values that do not satisfy the specification, and adjust with the [F6] and [F7] keys as follows. To raise the recording level: Press the [F6] (UP) key To lower the recording level: Press the [F7] (DOWN) key
(11) Press the [F1] (TEST OFF) key. The test tape (TY-30BX) will be ejected automatically.	

17. REC/PB ERROR RATE CHECK

Equipment and Tools:
Not required

Test Tape:
Test tape TY-30BX

Note: 1. Be sure to mount the top plate when measuring the REC/PB ERROR RATE.
2. Before performing checks, clean the head with a cleaning tape.

Procedure	Adjustments/Checks/Specifications
(1) Using the ⇧ and ⇩ keys, select "17. REC/PB ERROR RATE CHECK". (2) Press the F1 (TEST ON) key. (3) Insert the test tape (TY-30BX). (4) Check that "REC HEAD LEADING" is displayed.	EL Display RECORDER ADJUSTMENT 17. REC/PB ERROR RATE CHECK REC SPEED X1 REC HEAD LEADING ERROR RATE A-CH X.XE-X (TRAILING) B-CH X.XE-X RECODER: REC TIME CODE: 0 0 : 1 0 : 5 8 : 4 0 TEST OFF SPEED HEAD F 1 F 2 F 3 F 4 F 5 F 6 F 7
(5) Press the PLAY key. (6) Press the AUDIO EDIT key and check that the error rate of the trailing head playback during the leading head recording (X1) satisfies the specification.	**Specification:** Error rate A-CH = 5E-3 (Display) (Less than or equal 5 × 10) B-CH = 5E-3 (Display) (Less than or equal 5 × 10)
(7) Press the STOP key. (8) Press the F3 (SPEED) key and select "REC SPEED X2". (9) Press the PLAY key. (10) Press the AUDIO EDIT key and check that the error rate of the trailing head playback during the leading head recording (X1) satisfies the specification. (11) Press the STOP key.	**Specification:** Error rate A-CH = 5E-3 (Display) (Less than or equal 5 × 10) B-CH = 5E-3 (Display) (Less than or equal 5 × 10)
(12) Press the F3 (SPEED) key and select "REC SPEED X1". (13) Press the F4 (HEAD) key and check that "REC HEAD TRAILING" is displayed. (14) Press the PLAY key. (15) Press the AUDIO EDIT key and record for twenty seconds. (16) Press the STOP key.	

(17) Press SHUTTLE (–2) ([4] key) and rewind until the part where recording starts. Note: Rewind according to the TIME CODE displayed. (18) Press the PLAY key, playback the trailing head recording part, and check that the playback error rate satisfies the specification.	**Specification:** Error rate A-CH = 5E-3 (Display) (Less than or equal 5 × 10) B-CH = 5E-3 (Display) (Less than or equal 5 × 10)
(19) Press the STOP key. (20) Press the F1 (TEST OFF) key. The test tape (TY-30BX) will be ejected automatically.	

18. SERVO DATA SAVE

Equipment and Tools: Not required
Test Tape: Not required

Procedure	Checks
(1) Turn on the S1-2 (BIT SW2) switch of the SV-147 board and check that it is on at the top right of the display (Menu of adjustments).	
(2) Using the ↑ and ↓ keys, select "18. SERVO DATA SAVE". (3) Press the F1 (TEST ON) key. Check that "MESSAGE: SAVING IS COMPLETED!" is displayed. (4) After checking, press the F1 (TEST OFF) key. (5) Set the S1 switch of the SV-147 board as follows. S1-1 to S1-4: All off	EL Display 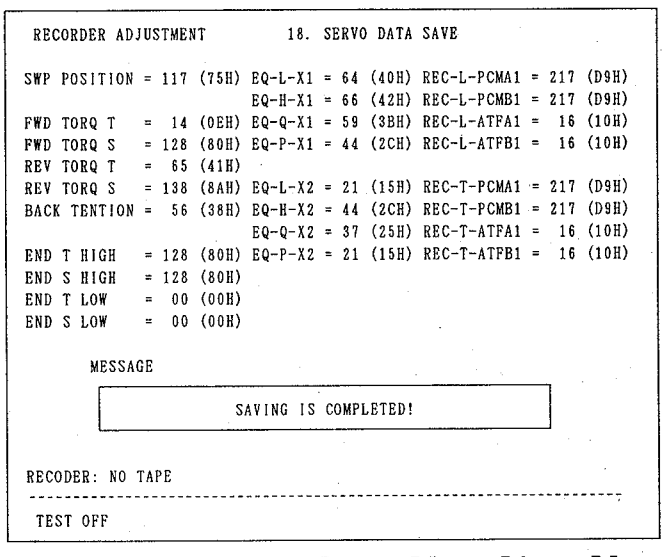

19. SERVO DATA DISPLAY

Equipment and Tools: Not required
Test Tape: Not required

Note: The servo data display is used for checking the servo data.
By executing it during adjustments, adjustment values can be checked even without saving.

Procedure	Check
(1) Using the ↑ and ↓ keys, select "19. SERVO DATA DISPLAY". (2) Press the F1 (TEST ON) key. (3) Check the servo data on the display. (4) Press the F2 (EXIT) key.	EL Display

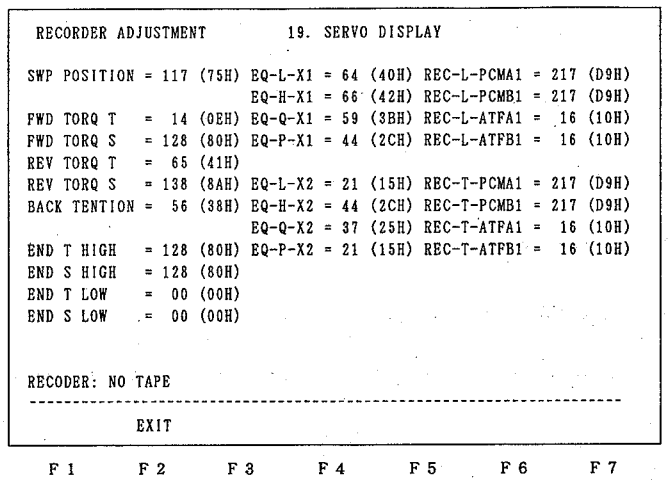

2-2-3. CHECKS AFTER SV-147 BOARD REPLACEMENT

Be sure to perform the following checks after replacing the SV-147 board and before mounting the mechanical deck assembly.

Equipment and Tools:
Not required

Test Tape:
Blank cassette (Refer to "2-2-1. Preparations".)

Servo Microprocessor Operations Check

(1) Turn on the BIT switch (S1-3) of the SV-147 board.

(2) Turn on the power of the unit.

(3) Check that the LED (D1) of the SV-147 board blinks every second.

(4) Insert the blank cassette and turn on the BIT switch (S1-1) of the SV-147 board.

(5) Check that the blank cassette is ejected and turn off the BIT switch (S1-1).

After completing the above, adjust and check according to "2-2. Adjustments and Checks".

SECTION 3
ELECTRICAL ALIGNMENT

This section describes the electrical adjustments that need to be carried out when repairing and servicing the ADA-31 board.
Carry out the following adjustments for the ADA-31 board.

Adjustments

3-1. A/D, D/A Adjustments (ADA-31 Board)

3-1-1. A/D Conversion Level Adjustment

↓

3-1-2. D/A Conversion Level Adjustment

Equipment Used

Name	Specification	Equipment
Audio analyzer	• AF oscillator Range: 10 to 100 kHz Level: –70 to +24 dBm • Distortion analyzer (Level meter)	TEKTRONIX SG505 (OP2) AA501 or equivalent

3-1. A/D, D/A ADJUSTMENTS (ADA-31 BOARD)

Preparations:

- Remove the top board and key assembly to carry out this adjustment.
  But do not disconnect the harness from the key assembly.
  (For details of removing them, refer to "Maintenance Manual Part 1")

- After setting the mode according to the following procedure, carry out the adjustments.
  (For details of setting, refer to "OPERATION GUIDE")

Procedure:

(1) Call "FACTORY SETTING" (factory setting data) at the SET UP mode (EL display) (SUB MODE: SYSTEM).

(2) Set the SUB MODE: EXT ANALOG (external input mode) of the MANUAL REC mode (EL display).

Carry out the following adjustments in this mode.

3-1-1. A/D Conversion Level Adjustment

Carry out the electrical adjustment of the A/D block of the ADA-31 board.
Carry this out first when the ADA-31 board has been replaced and then carry out "3-1-2. D/A Conversion Level Adjustment".

Equipment Used
Audio analyzer (AF oscillator)

Connection

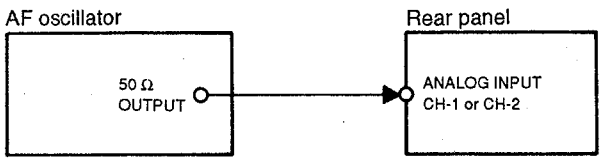

Adjustment Location

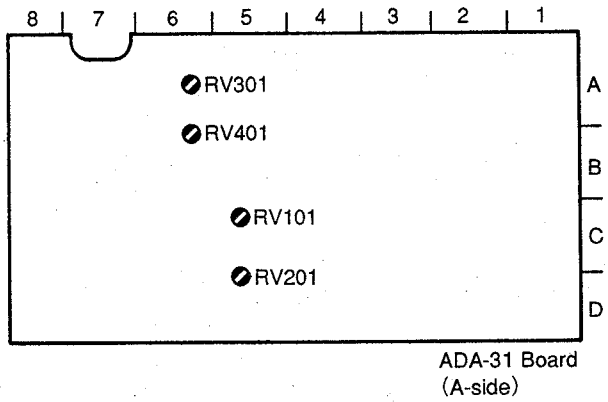

Preparation Before Adjustments
1. Press function key F7 (METER key) to show the meter value.

2. Check that the GAIN display shows "0.0 dB" for both CH1 and CH2.
   If not, press functions keys F6 (BAL RES) and F7 (LVL RES) and set the display to 0.0 dB.

Adjustment

Step	Adjustment Condition	Specification	Adjustment Location (ADA-31 Board)
1	• Input the 1 kHz, 4 dBs signal to the ANALOG IN CH1 connector.	METER display CH1 value; –20.0 dB	RV101 (C, 5)
2	• Input the 1 kHz, 4 dBs signal to the ANALOG IN CH2 connector.	METER display CH2 value; –20.0 dB	RV201 (D, 5)

3-1-2. D/A Conversion Level Adjustment

Carry out the electrical adjustment of the D/A block of the ADA-31 board.
Carry this out after the "3-1-1. A/D Conversion Level Adjustment".

Equipment Used
Audio analyzer (AF oscillator)
Distortion analyzer (level meter)

Connection

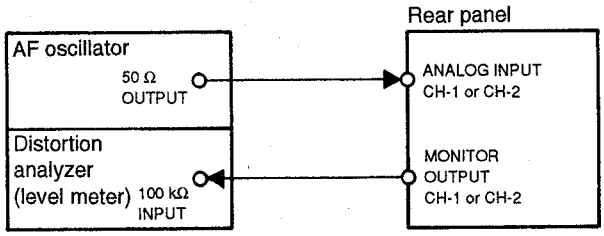

Adjustment Location

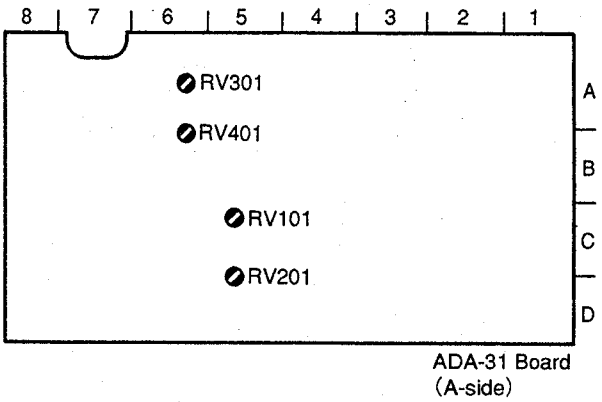

Adjustment

Step	Adjustment Condition	Specification	Adjustment Location (ADA-31 Board)
1	• Input the 1 kHz, 4 dBs signal to the ANALOG IN CH1 connector.	MONITOR OUTPUT CH1 Output level; −10 dBs ± 0.5 dB	RV301 (A, 6)
2	• Input the 1 kHz, 4 dBs signal to the ANALOG IN CH2 connector.	MONITOR OUTPUT CH2 Output level; −10 dBs ± 0.5 dB	RV401 (B, 6)

SECTION 4
BOARD LAYOUTS

	Board	Function	Page
A	ADA-31	Rec Audio,A/D Converter:PB Audio,D/A Converter	4-2
C	CP-233	Connector(ANALOG IN,DIGITAL IN)	4-7
	CP-234	Connector(MONITOR OUT)	4-7
H	HP-57	Headphones	4-8
K	KY-247	Eject Key	4-8
L	LED-160	Power Indicator	4-8
R	RF-53	RF Amplifier	4-2
S	SSP-8	System Control,Signal Processor	4-4
	SV-147	Servo	4-6
V	VR-154	Rotary Encoder(BALANCE)	4-8
	VR-181	Rotary Encoder(LEVEL)	4-8

OTHERS

- CAPSTAN FLEXIBLE 4-6
- GOMA 4-6
- RECOGNI END FLEXIBLE 4-6
- REEL FG 4-6
- REEL FG.DEW FLEXIBLE 4-6
- TENREGI 4-6
- TENREGI MOTOR ENCODER FLEXIBLE 4-6

ADA-31 BOARD
A Side

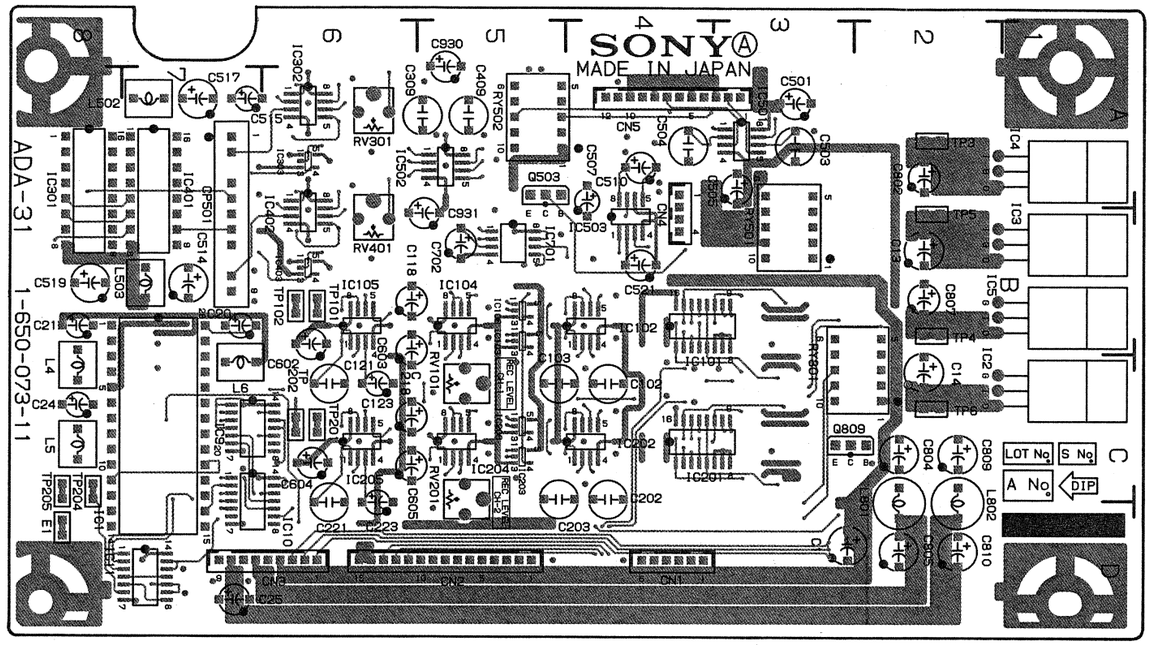

1-650-073-11 A SIDE

A Side is the same as Component Side.

ADA-31 BOARD
1-650-073-11

CN1	D-4	IC302	A-6
CN2	D-5	IC303	A-6
CN3	D-6	IC401	A-7
CN4	A-4	IC402	A-6
CN5	A-4	IC403	B-6
		IC501	A-3
D1	*B-2	IC502	A-6
D2	*C-2	IC503	B-4
D3	*A-2	IC701	B-5
D4	*B-2		
D6	*B-7	L4	C-8
D7	*B-7	L5	C-8
D8	*D-7	L6	C-8
D9	*D-7	L502	A-8
D10	*C-7	L503	B-8
D11	*C-7	L801	D-2
D12	*C-7	L802	D-2
D101	*C-3		
D102	*B-3	Q4	*D-7
D103	*B-3	Q501	*B-5
D104	*C-3	Q502	*B-5
D105	*B-4	Q503	A-5
D106	*B-4	Q504	*A-4
D201	*C-3	Q505	*A-4
D202	*C-3	Q801	*C-3
D203	*C-3	Q802	*D-3
D204	*C-3	Q803	*C-4
D206	*C-4	Q804	*C-4
D207	*C-4	Q805	*B-6
D501	*A-4	Q806	*B-6
D502	*A-4	Q807	*B-4
D503	*A-4	Q808	*C-4
D504	*A-4	Q809	C-3
D801	*C-2		
D901	*A-5	RV101	C-5
D902	*B-3	RV201	C-5
		RV301	A-6
E1	D-8	RV401	B-6
		RY501	B-3
IC1	D-8	RY502	A-5
IC2	B-1	RY801	C-3
IC3	B-1		
IC4	A-1		
IC5	B-2	TP3	A-2
IC9	C-7	TP4	B-2
IC10	D-6	TP5	B-2
IC11	D-8	TP6	C-2
IC101	C-4	TP101	B-6
IC102	B-4	TP102	B-6
IC103	B-5	TP201	C-6
IC104	B-5	TP202	C-6
IC105	B-6	TP204	C-8
IC106	B-5	TP205	C-8
IC201	C-4		
IC202	C-4		
IC203	C-5		
IC204	C-5		
IC205	C-6		
IC206	C-5		
IC301	A-8		

*:B(Soldering)Side mount

ADA-31 BOARD
B Side

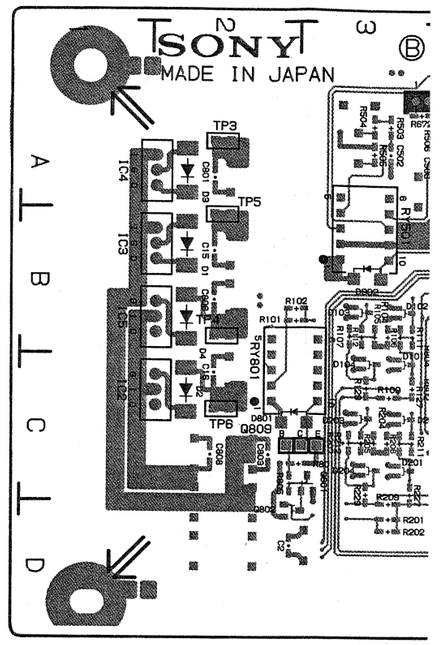

1-650-073-11 B SIDE

B Side is the same as Solder Side.

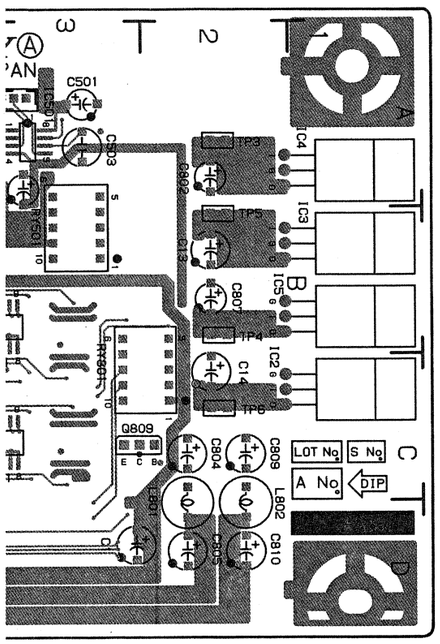

ADA-31 BOARD
1-650-073-11

CN1	D-4	IC302	A-6
CN2	D-5	IC303	A-6
CN3	D-6	IC401	A-7
CN4	A-4	IC402	A-6
CN5	A-4	IC403	B-6
		IC501	A-3
D1	*B-2	IC502	A-6
D2	*C-2	IC503	B-4
D3	*A-2	IC701	B-5
D4	*B-2		
D6	*B-7	L4	C-8
D7	*B-7	L5	C-8
D8	*D-7	L6	C-8
D9	*D-7	L502	A-8
D10	*C-7	L503	B-8
D11	*C-7	L801	D-2
D12	*C-7	L802	D-2
D101	*C-3		
D102	*B-3	Q4	*D-7
D103	*B-3	Q501	*B-5
D104	*C-3	Q502	*B-5
D105	*B-4	Q503	A-5
D106	*B-4	Q504	*A-4
D201	*C-3	Q505	*A-4
D202	*C-3	Q801	*C-3
D203	*C-3	Q802	*D-3
D204	*C-3	Q803	*C-4
D206	*C-4	Q804	*C-4
D207	*C-4	Q805	*B-6
D501	*A-4	Q806	*B-6
D502	*A-4	Q807	*B-4
D503	*A-4	Q808	*C-4
D504	*A-4	Q809	C-3
D801	*C-2		
D901	*A-5	RV101	C-5
D902	*B-3	RV201	C-5
		RV301	A-6
E1	D-8	RV401	B-6
IC1	D-8	RY501	B-3
IC2	B-1	RY502	A-5
IC3	B-1	RY801	C-3
IC4	A-1		
IC5	B-2	TP3	A-2
IC9	C-7	TP4	B-2
IC10	D-6	TP5	B-2
IC11	D-8	TP6	C-2
IC101	C-4	TP101	B-6
IC102	B-4	TP102	B-6
IC103	B-5	TP201	C-6
IC104	B-5	TP202	C-6
IC105	B-6	TP204	C-8
IC106	B-5	TP205	C-8
IC201	C-4		
IC202	C-4		
IC203	C-5		
IC204	C-5		
IC205	C-6		
IC206	C-5		
IC301	A-8		

*:B(Soldering)Side mount

ADA-31 BOARD
B Side

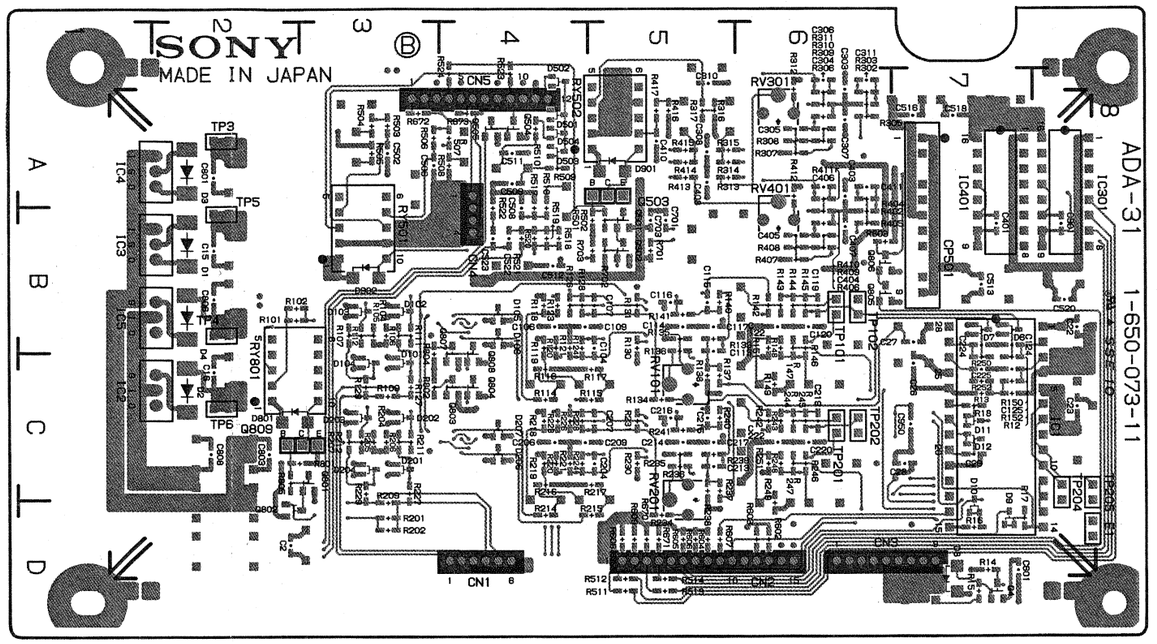

1-650-073-11 B SIDE

B Side is the same as Solder Side.

ADA-31 BOARD
A Side

Serial No.J ;10001 to 10110
UC;20001 to 20055
EK;50001 to 50235

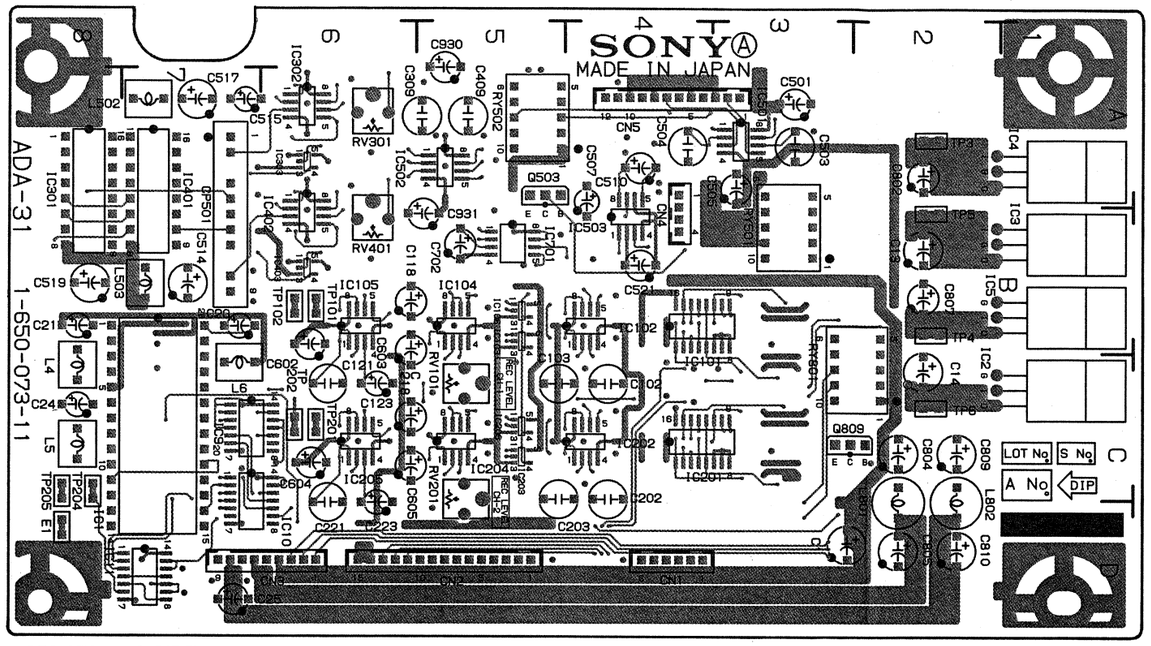

1-650-073-11 A SIDE

A Side is the same as Component Side.

ADA-31 BOARD
1-650-073-11

CN1	D-4	IC302	A-6
CN2	D-5	IC303	A-6
CN3	D-6	IC401	A-7
CN4	A-4	IC402	A-6
CN5	A-4	IC403	B-6
		IC501	A-3
D1	*B-2	IC502	A-6
D2	*C-2	IC503	B-4
D3	*A-2	IC701	B-5
D4	*B-2		
D6	*B-7	L4	C-8
D7	*B-7	L5	C-8
D8	*D-7	L6	C-8
D9	*D-7	L502	A-8
D10	*C-7	L503	B-8
D11	*C-7	L801	D-2
D12	*C-7	L802	D-2
D101	*C-3		
D102	*B-3	Q4	*D-7
D103	*B-3	Q501	*B-5
D104	*C-3	Q502	*B-5
D105	*B-4	Q503	A-5
D106	*B-4	Q504	*A-4
D201	*C-3	Q505	*A-4
D202	*C-3	Q801	*C-3
D203	*C-3	Q802	*D-3
D204	*C-3	Q803	*C-4
D206	*C-4	Q804	*C-4
D207	*C-4	Q805	*B-6
D501	*A-4	Q806	*B-6
D502	*A-4	Q807	*B-4
D503	*A-4	Q808	*C-4
D504	*A-4	Q809	C-3
D801	*C-2		
D901	*A-5	RV101	C-5
D902	*B-3	RV201	C-5
		RV301	A-6
E1	D-8	RV401	B-6
		RY501	B-3
IC1	D-8	RY502	A-5
IC2	B-1	RY801	C-3
IC3	B-1		
IC4	A-1		
IC5	B-2	TP3	A-2
IC9	C-7	TP4	B-2
IC10	D-6	TP5	B-2
IC11	D-8	TP6	C-2
IC101	C-4	TP101	B-6
IC102	B-4	TP102	B-6
IC103	B-5	TP201	C-6
IC104	B-5	TP202	C-6
IC105	B-6	TP204	C-8
IC106	B-5	TP205	C-8
IC201	C-4		
IC202	C-4		
IC203	C-5		
IC204	C-5		
IC205	C-6		
IC206	C-5		
IC301	A-8		

*;B(Soldering)Side mount

ADA-31 BOARD
B Side

Serial No.J
U
E

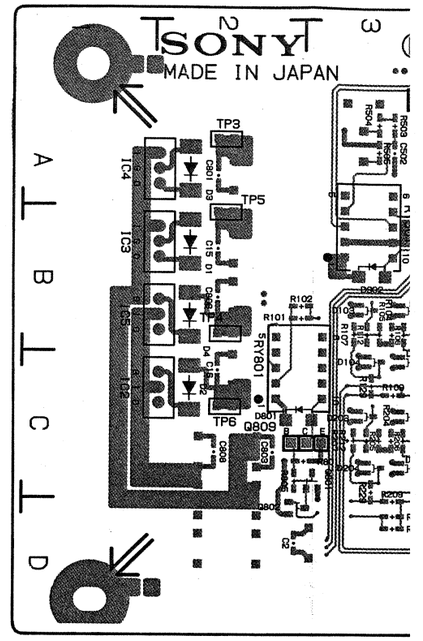

1-650-073-11 B SIDE

B Side is the same as Solder Side.

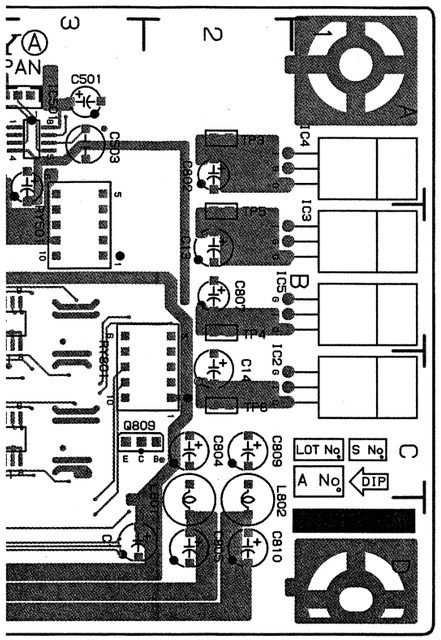

ADA-31 BOARD
1-650-073-11

CN1	D-4	IC302	A-6
CN2	D-5	IC303	A-6
CN3	D-6	IC401	A-7
CN4	A-4	IC402	A-6
CN5	A-4	IC403	B-6
		IC501	A-3
D1	*B-2	IC502	A-6
D2	*C-2	IC503	B-4
D3	*A-2	IC701	B-5
D4	*B-2		
D6	*B-7	L4	C-8
D7	*B-7	L5	C-8
D8	*D-7	L6	C-8
D9	*D-7	L502	A-8
D10	*C-7	L503	B-8
D11	*C-7	L801	D-2
D12	*C-7	L802	D-2
D101	*C-3		
D102	*B-3	Q4	*D-7
D103	*B-3	Q501	*B-5
D104	*C-3	Q502	*B-5
D105	*B-4	Q503	A-5
D106	*B-4	Q504	*A-4
D201	*C-3	Q505	*A-4
D202	*C-3	Q801	*C-3
D203	*C-3	Q802	*D-3
D204	*C-3	Q803	*C-4
D206	*C-4	Q804	*C-4
D207	*C-4	Q805	*B-6
D501	*A-4	Q806	*B-6
D502	*A-4	Q807	*B-4
D503	*A-4	Q808	*C-4
D504	*A-4	Q809	C-3
D801	*C-2		
D901	*A-5	RV101	C-5
D902	*B-3	RV201	C-5
		RV301	A-6
E1	D-8	RV401	B-6
IC1	D-8	RY501	B-3
IC2	B-1	RY502	A-5
IC3	B-1	RY801	C-3
IC4	A-1		
IC5	B-2	TP3	A-2
IC9	C-7	TP4	B-2
IC10	D-6	TP5	B-2
IC11	D-8	TP6	C-2
IC101	C-4	TP101	B-6
IC102	B-4	TP102	B-6
IC103	B-5	TP201	C-6
IC104	B-5	TP202	C-6
IC105	B-6	TP204	C-8
IC106	B-5	TP205	C-8
IC201	C-4		
IC202	C-4		
IC203	C-5		
IC204	C-5		
IC205	C-6		
IC206	C-5		
IC301	A-8		

*;B(Soldering)Side mount

ADA-31 BOARD
B Side

Serial No.J ;10001 to 10110
UC ;20001 to 20055
EK ;50001 to 50235

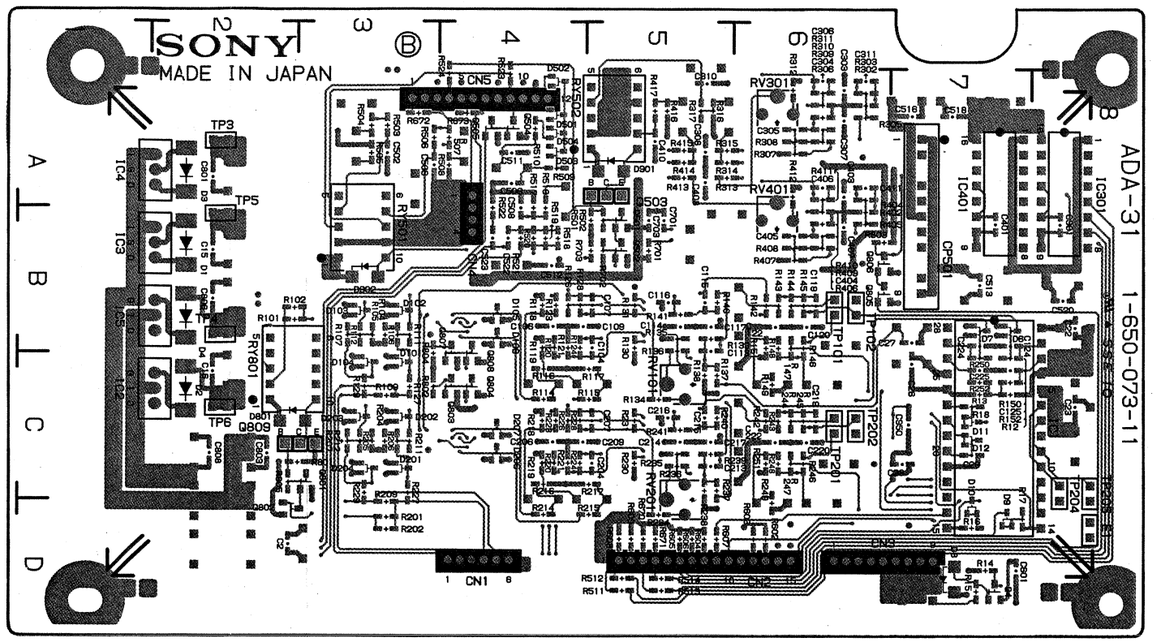

1-650-073-11 B SIDE

B Side is the same as Solder Side.

ADA-31 BOARD
A Side

Serial No.J ;10111 and higher
UC;20056 and higher
EK;50236 and higher

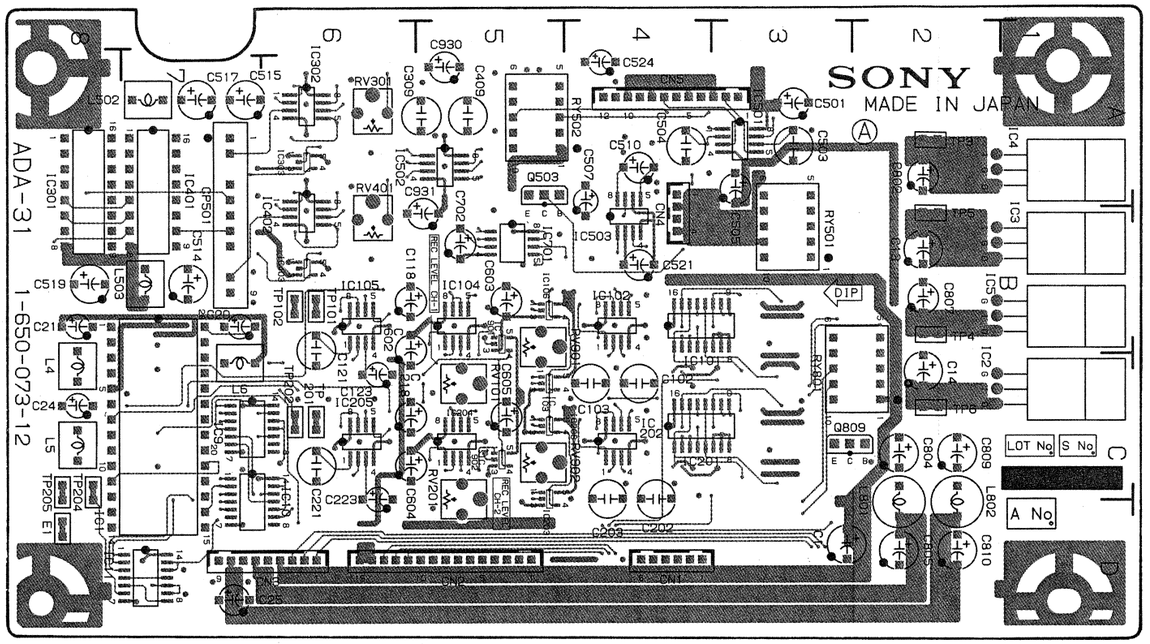

1-650-073-12 A SIDE

A Side is the same as Component Side.

ADA-31 BOARD
1-650-073-12

CN1	D-4	IC302	A-6
CN2	D-5	IC303	A-6
CN3	D-6	IC401	A-7
CN4	B-4	IC402	A-6
CN5	A-4	IC403	B-6
		IC501	A-3
CP501	A-7	IC502	A-6
		IC503	B-4
D1	*B-2	IC701	B-5
D2	*C-2	IC901	B-5
D3	*A-2	IC902	C-5
D4	*B-2		
D6	*B-7	L4	C-8
D7	*B-7	L5	C-8
D8	*D-7	L6	C-7
D9	*D-7	L502	A-8
D10	*C-7	L503	B-8
D11	*C-7	L801	D-2
D12	*C-7	L802	D-2
D101	*C-3		
D102	*B-3	Q4	*D-7
D103	*B-3	Q501	*B-5
D104	*C-3	Q502	*B-5
D105	*B-4	Q503	A-5
D106	*C-4	Q504	*A-4
D201	*C-3	Q505	*A-4
D202	*C-3	Q801	*C-3
D203	*C-3	Q802	*D-2
D204	*C-3	Q803	*C-4
D206	*C-4	Q804	*C-4
D207	*C-4	Q805	*B-6
D501	*A-4	Q806	*B-6
D502	*A-4	Q807	*B-4
D503	*A-4	Q808	*C-4
D504	*A-4	Q809	C-3
D801	*C-3	Q901	*C-6
D901	*A-5	Q902	*C-6
D902	*B-3		
		RV101	C-5
E1	D-8	RV201	C-5
		RV301	A-6
IC1	D-8	RV401	A-6
IC2	C-2	RV901	B-4
IC3	B-1	RV902	C-4
IC4	A-1		
IC5	B-2	RY501	B-3
IC9	C-7	RY502	A-4
IC10	C-6	RY801	C-3
IC11	D-8		
IC101	C-4	TP3	A-2
IC102	B-4	TP4	B-2
IC103	C-5	TP5	B-2
IC104	B-5	TP6	C-2
IC105	B-6	TP101	B-6
IC106	B-5	TP102	B-6
IC201	C-4	TP201	C-6
IC202	C-4	TP202	C-6
IC203	D-5	TP204	C-8
IC204	C-5	TP205	C-8
IC205	C-6		
IC206	C-4		
IC301	A-8		

*:B(Soldering)Side mount

ADA-31 BOARD
B Side

Serial No.J ;101
UC;200
EK;502

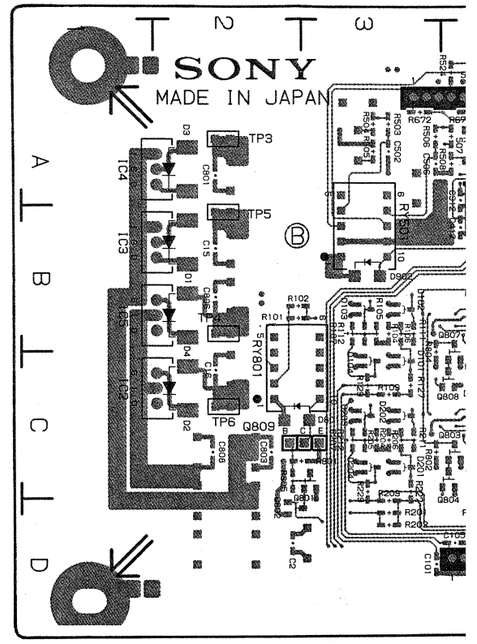

1-650-073-12 B SIDE

B Side is the same as Solder Side.

ADA-31 BOARD
B Side

Serial No.J ;10111 and higher
UC;20056 and higher
EK;50236 and higher

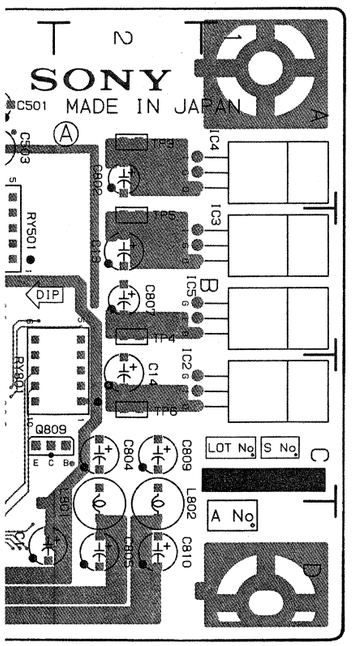

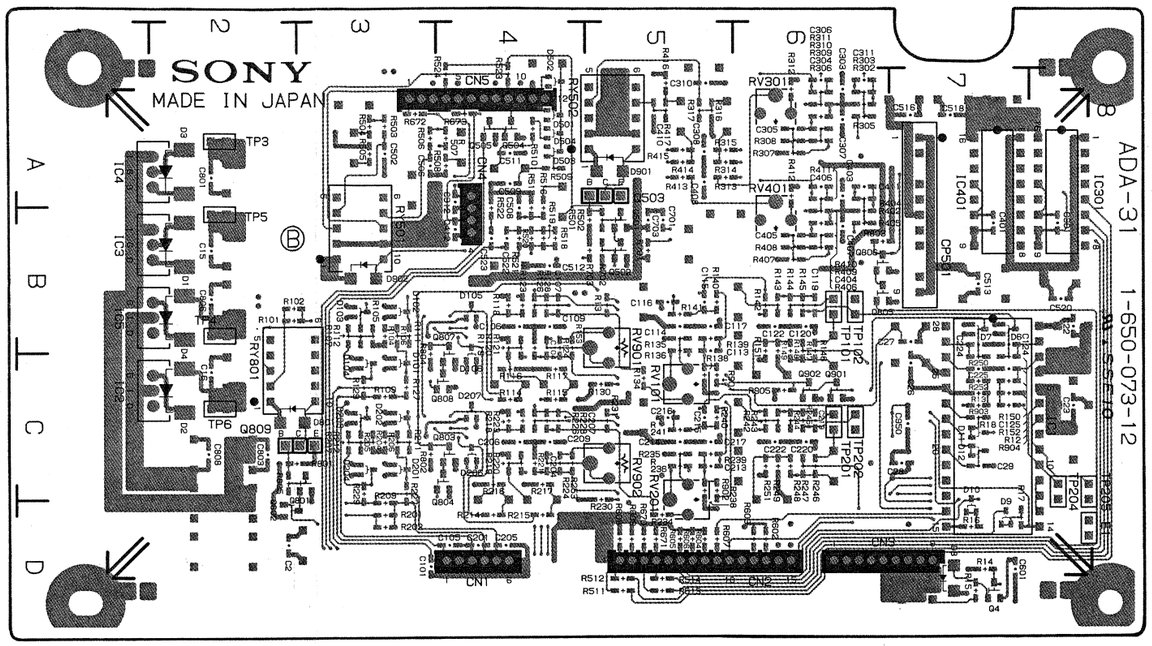

1-650-073-12 B SIDE

B Side is the same as Solder Side.

ADA-31 BOARD
1-650-073-12

CN1	D-4	IC302	A-6
CN2	D-5	IC303	A-6
CN3	D-6	IC401	A-7
CN4	B-4	IC402	A-6
CN5	A-4	IC403	B-6
		IC501	A-3
CP501	A-7	IC502	A-6
		IC503	B-4
D1	*B-2	IC701	B-5
D2	*C-2	IC901	B-5
D3	*A-2	IC902	C-5
D4	*B-2		
D6	*B-7	L4	C-8
D7	*B-7	L5	C-8
D8	*D-7	L6	C-7
D9	*D-7	L502	A-8
D10	*C-7	L503	B-8
D11	*C-7	L801	D-2
D12	*C-7	L802	D-2
D101	*C-3		
D102	*B-3	Q4	*D-7
D103	*B-3	Q501	*B-5
D104	*C-3	Q502	*B-5
D105	*B-4	Q503	A-5
D106	*C-4	Q504	*A-4
D201	*C-3	Q505	*A-4
D202	*C-3	Q801	*C-3
D203	*C-3	Q802	*D-2
D204	*C-3	Q803	*C-4
D206	*C-4	Q804	*C-4
D207	*C-4	Q805	*B-6
D501	*A-4	Q806	*B-6
D502	*A-4	Q807	*B-4
D503	*A-4	Q808	*C-4
D504	*A-4	Q809	C-3
D801	*C-3	Q901	*C-6
D901	*A-5	Q902	*C-6
D902	*B-3		
		RV101	C-5
E1	D-8	RV201	C-5
		RV301	A-6
IC1	D-8	RV401	A-6
IC2	C-2	RV901	B-4
IC3	B-1	RV902	C-4
IC4	A-1		
IC5	B-2	RY501	B-3
IC9	C-7	RY502	A-4
IC10	C-6	RY801	C-3
IC11	D-8		
IC101	C-4	TP3	A-2
IC102	B-4	TP4	B-2
IC103	C-5	TP5	B-2
IC104	B-5	TP6	C-2
IC105	B-6	TP101	B-6
IC106	B-5	TP102	B-6
IC201	C-4	TP201	C-6
IC202	C-4	TP202	C-6
IC203	D-5	TP204	C-8
IC204	C-5	TP205	C-8
IC205	C-6		
IC206	C-4		
IC301	A-8		

*;B(Soldering)Side mount

SSP-8 BOARD
1-650-072-11

CN101	C-10	IC120	D-10	IC712	E-3
CN102	C-5	IC121	F-6	IC713	E-2
CN103	D-5	IC122	E-10	IC714	D-1
CN104	C-5	IC123	E-10	IC715	E-1
CN302	D-7	IC124	*E-10	IC716	E-1
CN303	B-1	IC125	F-10	IC717	C-2
CN501	F-1	IC126	F-9	IC718	C-2
CN701	B-7	IC127	F-8	IC719	F-3
CN702	A-7	IC128	F-8	IC720	C-2
CN703	A-6	IC129	D-6	IC721	C-2
CN704	F-1	IC131	E-10	IC722	C-2
CN706	B-1	IC132	*D-6	IC723	B-2
CN707	B-1	IC133	F-8	IC724	C-3
CN708	F-1	IC134	F-6	IC725	B-3
CN709	A-9	IC135	E-9	IC726	C-3
CN710	B-1	IC136	E-10	IC727	B-3
CN711	E-1	IC301	C-9	IC728	C-3
CN712	A-8	IC302	C-8	IC729	B-3
		IC303	*B-8	IC730	C-4
CP101	F-8	IC304	D-8	IC731	B-4
CP102	F-9	IC305	C-8	IC732	B-2
CP701	D-2	IC306	D-7	IC733	E-2
CP702	D-3	IC307	C-7	IC734	E-1
		IC308	*E-6	IC901	D-3
D101	*B-4	IC309	*C-7	IC902	E-4
D102	*B-4	IC310	C-7	IC903	E-4
D103	*B-4	IC311	C-6	IC904	E-4
D104	*B-3	IC312	*D-10	IC905	E-4
D105	*B-3	IC313	C-6	IC906	D-4
D106	E-9	IC314	B-10	IC907	E-5
D107	E-9	IC316	D-7	IC908	E-5
D108	E-9	IC317	C-5	IC909	E-5
D109	E-8	IC318	B-6	IC910	E-5
D701	D-1	IC319	*B-9	IC911	F-5
D702	D-1	IC501	A-9	IC912	F-4
D703	C-1	IC502	A-8	IC913	F-4
D704	C-1	IC503	B-10		
		IC504	A-6	L701	B-1
E701	A-10	IC505	D-8	L702	B-1
E702	A-7	IC506	C-10	L703	C-1
E705	D-10	IC507	B-8	L704	C-1
E707	F-9	IC508	B-7		
		IC509	B-6	ND301	B-10
IC101	E-8	IC510	*B-6	ND501	A-10
IC102	F-8	IC511	*B-7		
IC103	E-8	IC512	B-7	S102	F-7
IC104	E-7	IC513	B-10		
IC105	*D-7	IC514	B-6	TP701	A-7
IC106	E-7	IC515	B-10	TP702	A-7
IC107	D-7	IC517	B-6	TP703	A-7
IC108	E-6	IC701	C-1		
IC109	*E-6	IC702	C-1	T701	D-1
IC110	C-8	IC703	C-2		
IC111	E-8	IC704	D-2	X101	F-8
IC112	D-9	IC705	C-3	X102	F-7
IC114	*E-6	IC706	C-2	X103	F-8
IC115	F-6	IC707	B-2	X301	C-9
IC116	F-6	IC708	B-2	X501	B-9
IC117	F-7	IC709	B-1	X701	B-2
IC118	D-10	IC710	E-1		
IC119	*D-8	IC711	D-2		

*;B(Soldering)Side mount

SSP-8 BOARD
A Side

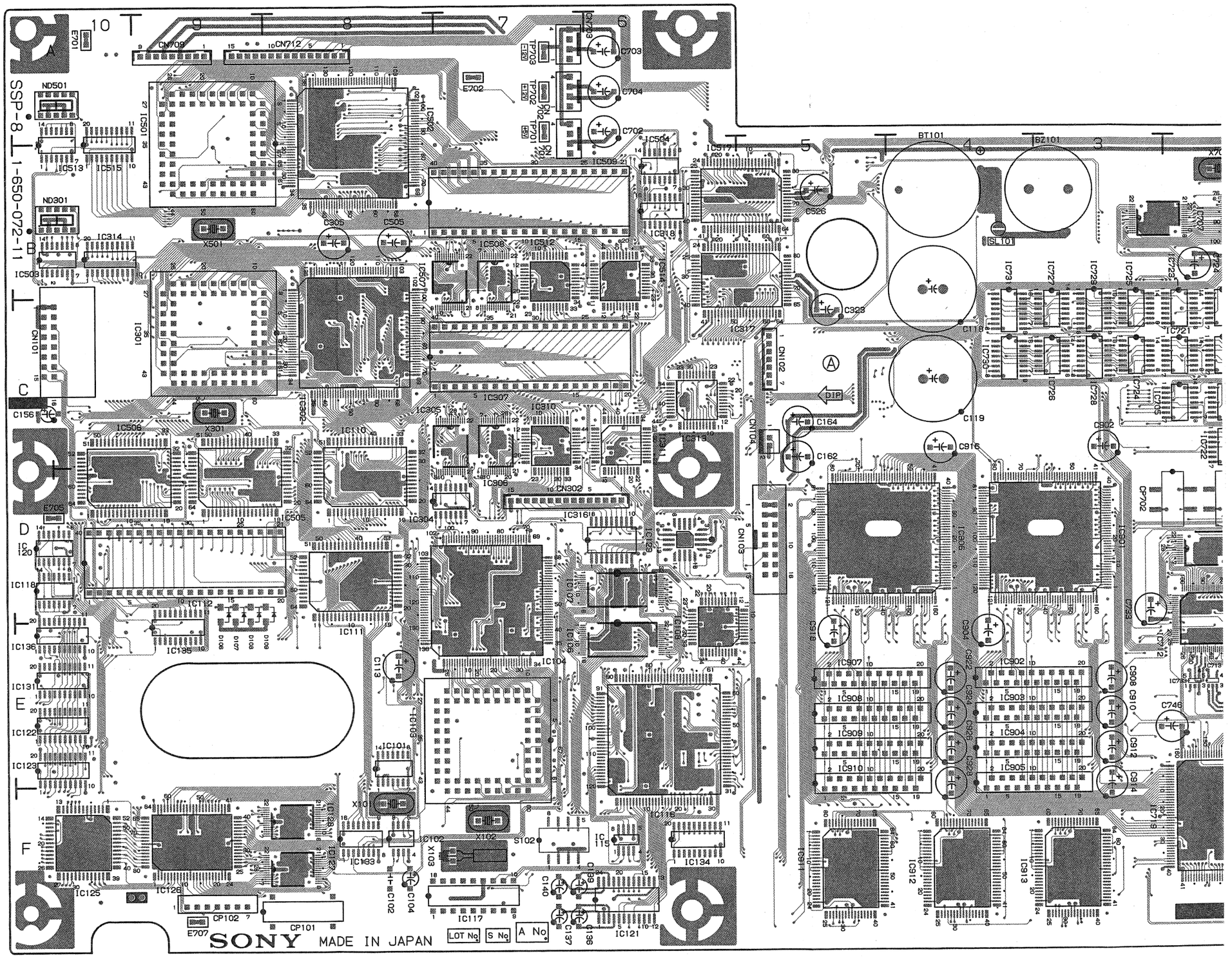

1--650-072-11 A SIDE

A Side is the same as Component Side.

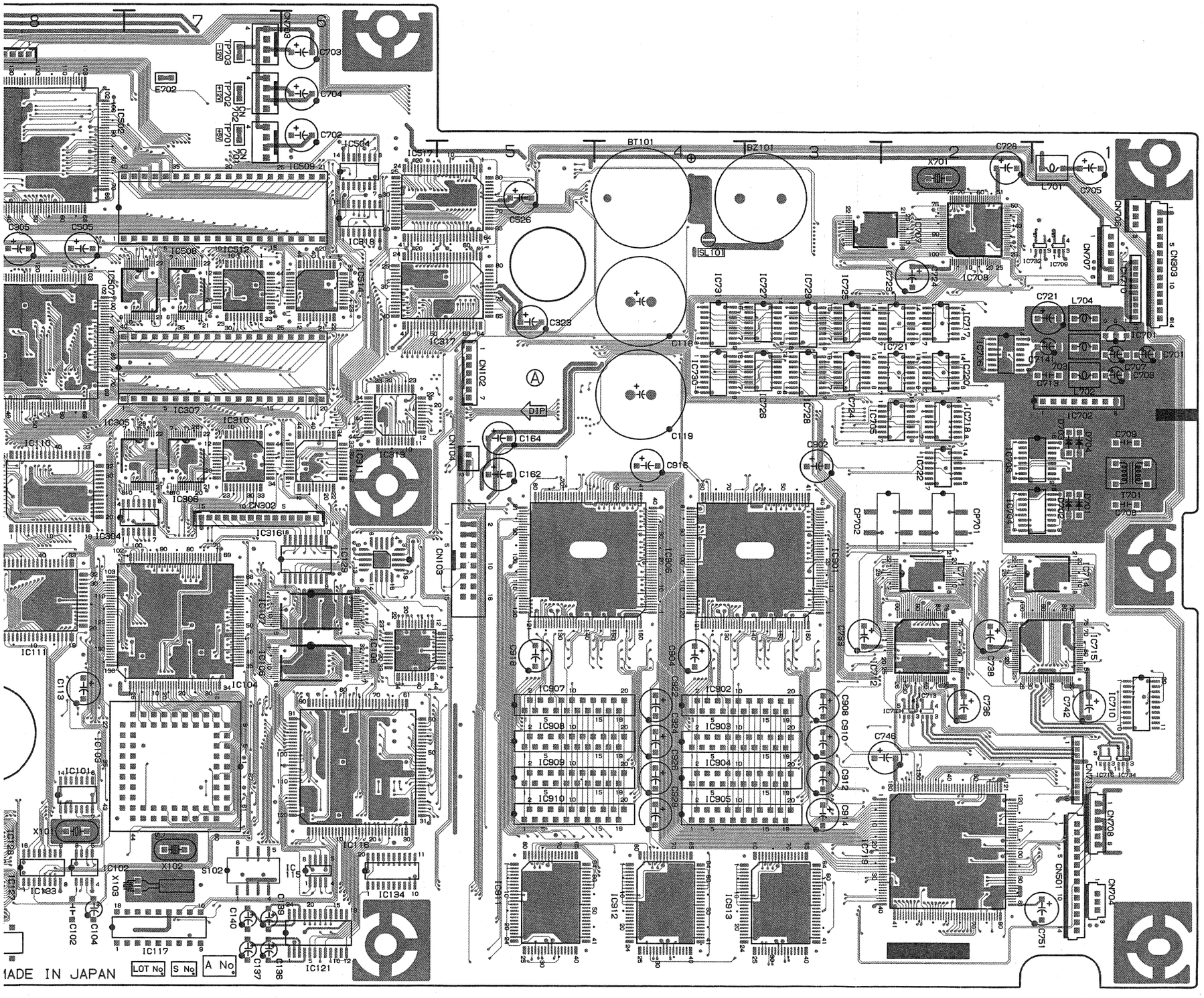
MADE IN JAPAN
LOT No.
S No.
A No.

SSP-8 BOARD
1-650-072-11

CN101	C-10	IC120	D-10	IC712	E-3
CN102	C-5	IC121	F-6	IC713	E-2
CN103	D-5	IC122	E-10	IC714	D-1
CN104	C-5	IC123	E-10	IC715	E-1
CN302	D-7	IC124	*E-10	IC716	E-1
CN303	B-1	IC125	F-10	IC717	C-2
CN501	F-1	IC126	F-9	IC718	C-2
CN701	B-7	IC127	F-8	IC719	F-3
CN702	A-7	IC128	F-8	IC720	C-2
CN703	A-6	IC129	D-6	IC721	C-2
CN704	F-1	IC131	E-10	IC722	C-2
CN706	B-1	IC132	*D-6	IC723	B-2
CN707	B-1	IC133	F-8	IC724	C-3
CN708	F-1	IC134	F-6	IC725	B-3
CN709	A-9	IC135	E-9	IC726	C-3
CN710	B-1	IC136	E-10	IC727	B-3
CN711	E-1	IC301	C-9	IC728	C-3
CN712	A-8	IC302	C-8	IC729	B-3
		IC303	*B-8	IC730	C-4
CP101	F-8	IC304	D-8	IC731	B-4
CP102	F-9	IC305	C-8	IC732	B-2
CP701	D-2	IC306	D-7	IC733	E-2
CP702	D-3	IC307	C-7	IC734	E-1
		IC308	*E-6	IC901	D-3
D101	*B-4	IC309	*C-7	IC902	E-4
D102	*B-4	IC310	C-7	IC903	E-4
D103	*B-4	IC311	C-6	IC904	E-4
D104	*B-3	IC312	*D-10	IC905	E-4
D105	*B-3	IC313	C-6	IC906	D-4
D106	E-9	IC314	B-10	IC907	E-5
D107	E-9	IC316	D-7	IC908	E-5
D108	E-9	IC317	C-5	IC909	E-5
D109	E-8	IC318	B-6	IC910	E-5
D701	D-1	IC319	*B-9	IC911	F-5
D702	D-1	IC501	A-9	IC912	F-4
D703	C-1	IC502	A-8	IC913	F-4
D704	C-1	IC503	B-10		
		IC504	A-6	L701	B-1
E701	A-10	IC505	D-8	L702	B-1
E702	A-7	IC506	C-10	L703	C-1
E705	D-10	IC507	B-8	L704	C-1
E707	F-9	IC508	B-7		
		IC509	B-6	ND301	B-10
IC101	E-8	IC510	*B-6	ND501	A-10
IC102	F-8	IC511	*B-7		
IC103	E-8	IC512	B-7	S102	F-7
IC104	E-7	IC513	B-10		
IC105	*D-7	IC514	B-6	TP701	A-7
IC106	E-7	IC515	B-10	TP702	A-7
IC107	D-7	IC517	B-6	TP703	A-7
IC108	E-6	IC701	C-1		
IC109	*E-6	IC702	C-1	T701	D-1
IC110	C-8	IC703	C-2		
IC111	E-8	IC704	D-2	X101	F-8
IC112	D-9	IC705	C-3	X102	F-7
IC114	*E-6	IC706	C-2	X103	F-8
IC115	F-6	IC707	B-2	X301	C-9
IC116	F-6	IC708	B-2	X501	B-9
IC117	F-7	IC709	B-1	X701	B-2
IC118	D-10	IC710	E-1		
IC119	*D-8	IC711	D-2		

*;B(Soldering)Side mount

SSP-8 BOARD
A Side

Serial No.J ;10001 to 10110
UC;20001 to 20055
EK;50001 to 50235

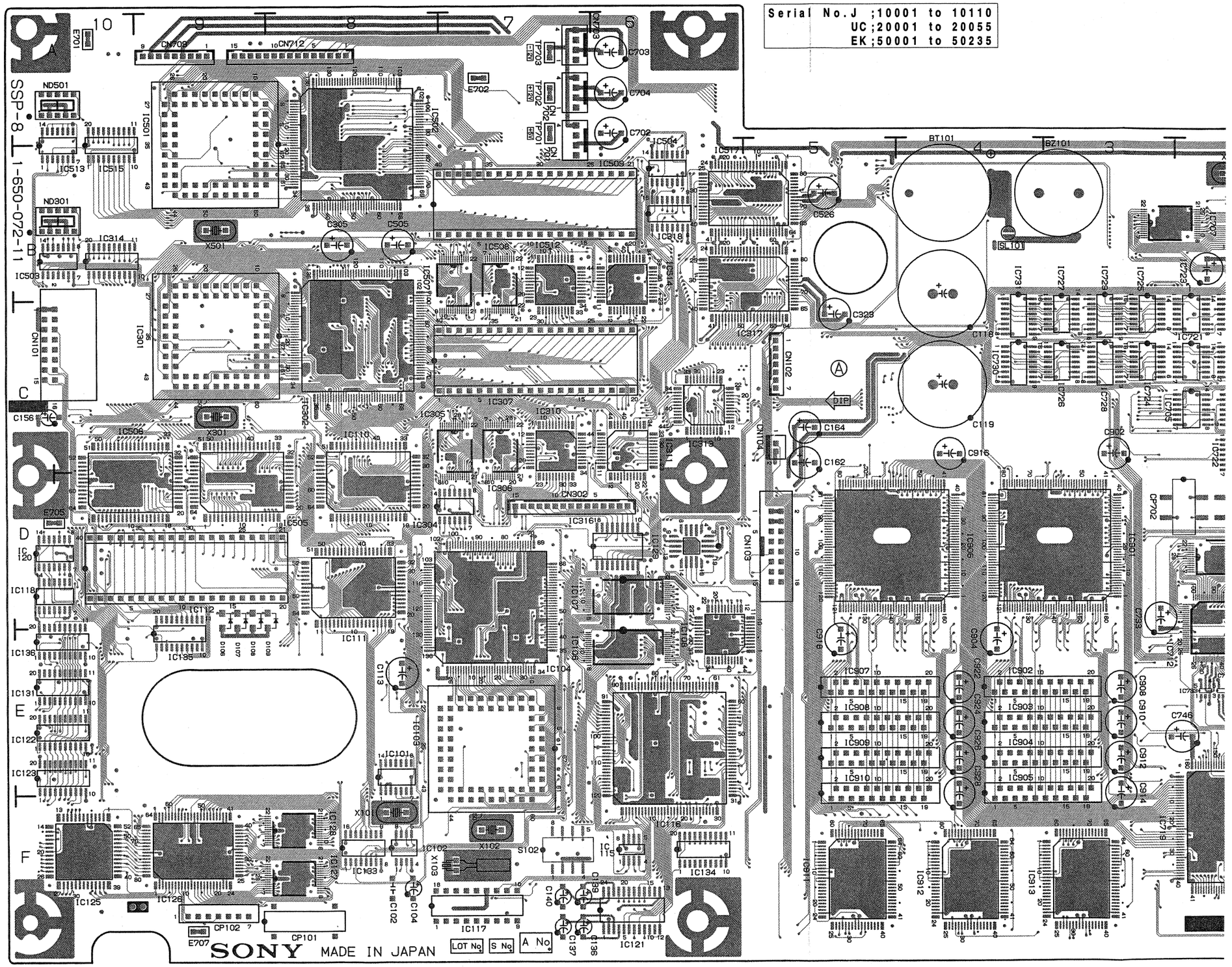

Serial No.J ;10001 to 10110
UC ;20001 to 20055
EK ;50001 to 50235

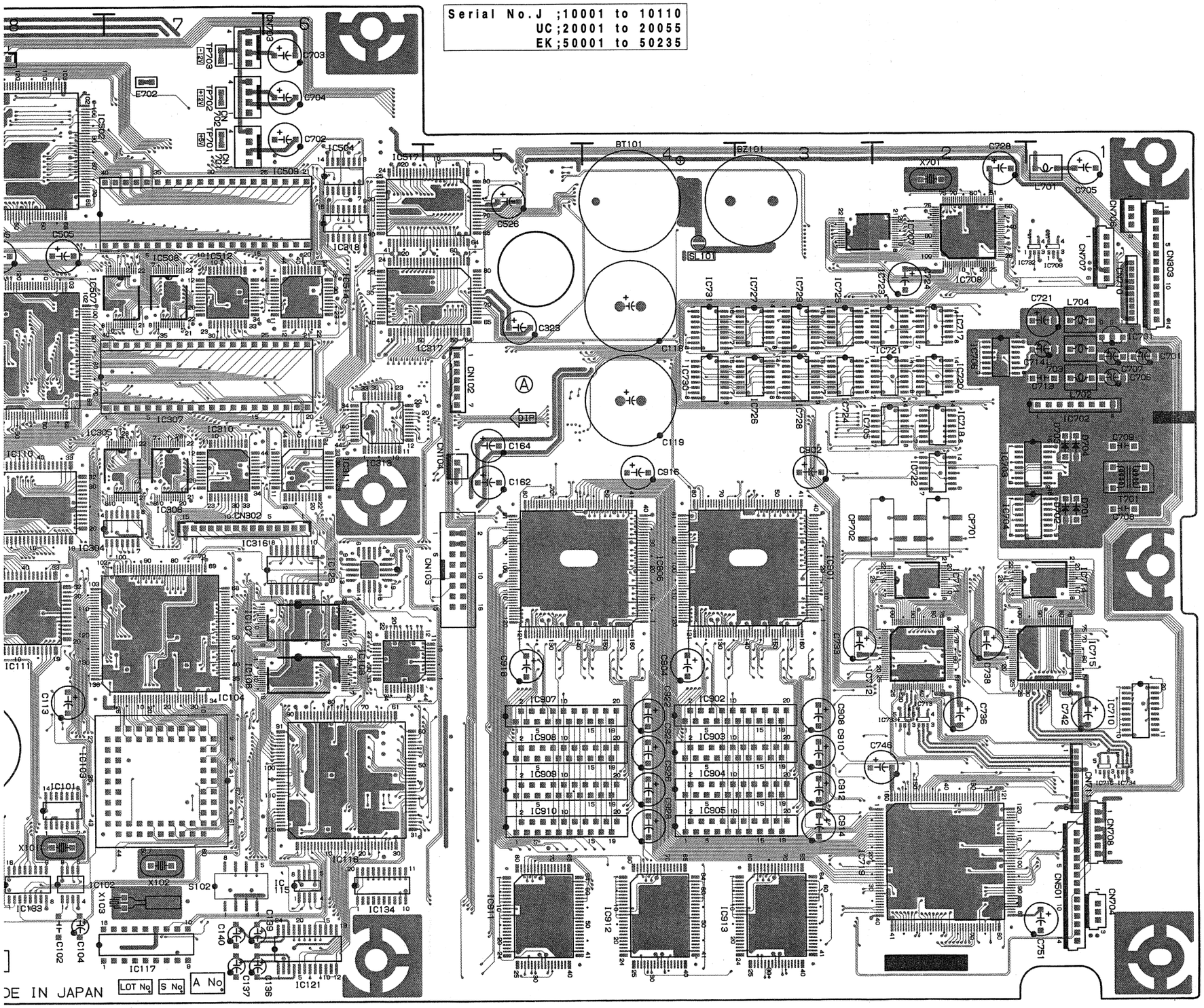

DUS-746 BOARD

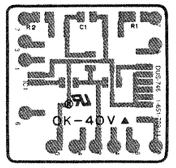

1-651-709-11 A SIDE

DUS-757 BOARD

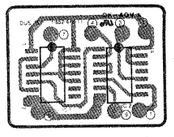

1-652-478-11 A SIDE

SSP-8 BOARD
1-650-072-12

CN101	C-10	IC121	F-6	IC716	E-1
CN102	C-5	IC122	E-10	IC717	C-2
CN103	D-5	IC123	E-10	IC718	C-2
CN104	C-5	IC124	*E-10	IC719	F-2
CN302	D-7	IC125	F-10	IC720	C-2
CN303	B-1	IC126	F-9	IC721	C-2
CN501	F-1	IC127	F-8	IC722	C-2
CN701	B-7	IC128	F-8	IC723	B-2
CN702	A-7	IC129	D-6	IC724	C-3
CN703	A-6	IC131	E-10	IC725	B-3
CN704	F-1	IC132	*D-6	IC726	C-4
CN706	B-1	IC133	F-8	IC727	B-3
CN707	B-1	IC134	F-6	IC728	C-3
CN708	F-1	IC135	E-9	IC729	B-3
CN709	A-9	IC136	E-10	IC730	C-4
CN710	B-1	IC301	C-9	IC731	B-4
CN711	E-1	IC302	B-8	IC735	B-1
CN712	A-8	IC303	*B-8	IC736	B-1
		IC304	D-8	IC737	*E-3
CP101	F-8	IC305	C-8	IC738	E-2
CP102	F-9	IC306	C-7	IC739	E-2
CP701	D-2	IC307	C-7	IC740	E-1
CP702	D-3	IC308	*E-6	IC901	D-3
		IC309	*C-7	IC902	E-4
D101	*B-4	IC310	C-7	IC903	E-4
D102	*B-4	IC311	C-6	IC904	E-4
D103	*B-4	IC312	*D-10	IC905	E-4
D104	*B-3	IC313	C-6	IC906	D-4
D105	*B-3	IC314	B-10	IC907	E-5
D106	E-9	IC316	D-7	IC908	E-5
D107	E-9	IC317	C-5	IC909	E-5
D108	E-9	IC318	B-6	IC910	E-5
D109	E-8	IC319	*B-9	IC911	F-4
D701	D-1	IC501	A-9	IC912	F-4
D702	D-1	IC502	A-8	IC913	F-3
D703	C-1	IC503	B-10	IC914	C-4
D704	C-1	IC504	B-6		
D705	*D-3	IC505	C-9	L701	B-1
		IC506	C-10	L702	C-1
E701	A-10	IC507	B-8	L703	C-1
E702	A-7	IC508	B-7	L704	B-1
E705	D-10	IC509	B-7	L705	F-1
E707	F-9	IC510	*B-6	L706	B-3
		IC511	*B-7		
IC101	E-8	IC512	B-7	ND301	B-10
IC102	F-8	IC513	B-10	ND501	A-10
IC103	E-8	IC514	B-6		
IC104	D-7	IC515	B-10	S102	F-7
IC105	*D-7	IC517	B-5		
IC106	E-7	IC701	C-1	TP701	A-7
IC107	D-7	IC702	C-1	TP702	A-7
IC108	E-5	IC703	C-2	TP703	A-7
IC109	*E-6	IC704	D-2		
IC110	C-8	IC705	C-3	T701	D-1
IC111	D-8	IC706	C-2		
IC112	D-9	IC707	B-2	X101	F-8
IC114	*E-6	IC708	B-2	X102	F-7
IC115	F-6	IC709	B-1	X103	F-8
IC116	E-6	IC711	D-2	X301	C-9
IC117	F-7	IC712	E-2	X501	B-9
IC118	D-10	IC713	E-2	X701	B-2
IC119	*D-8	IC714	D-1		
IC120	D-10	IC715	E-1		

*;B(Soldering)Side mount

SSP-8 BOARD
A Side

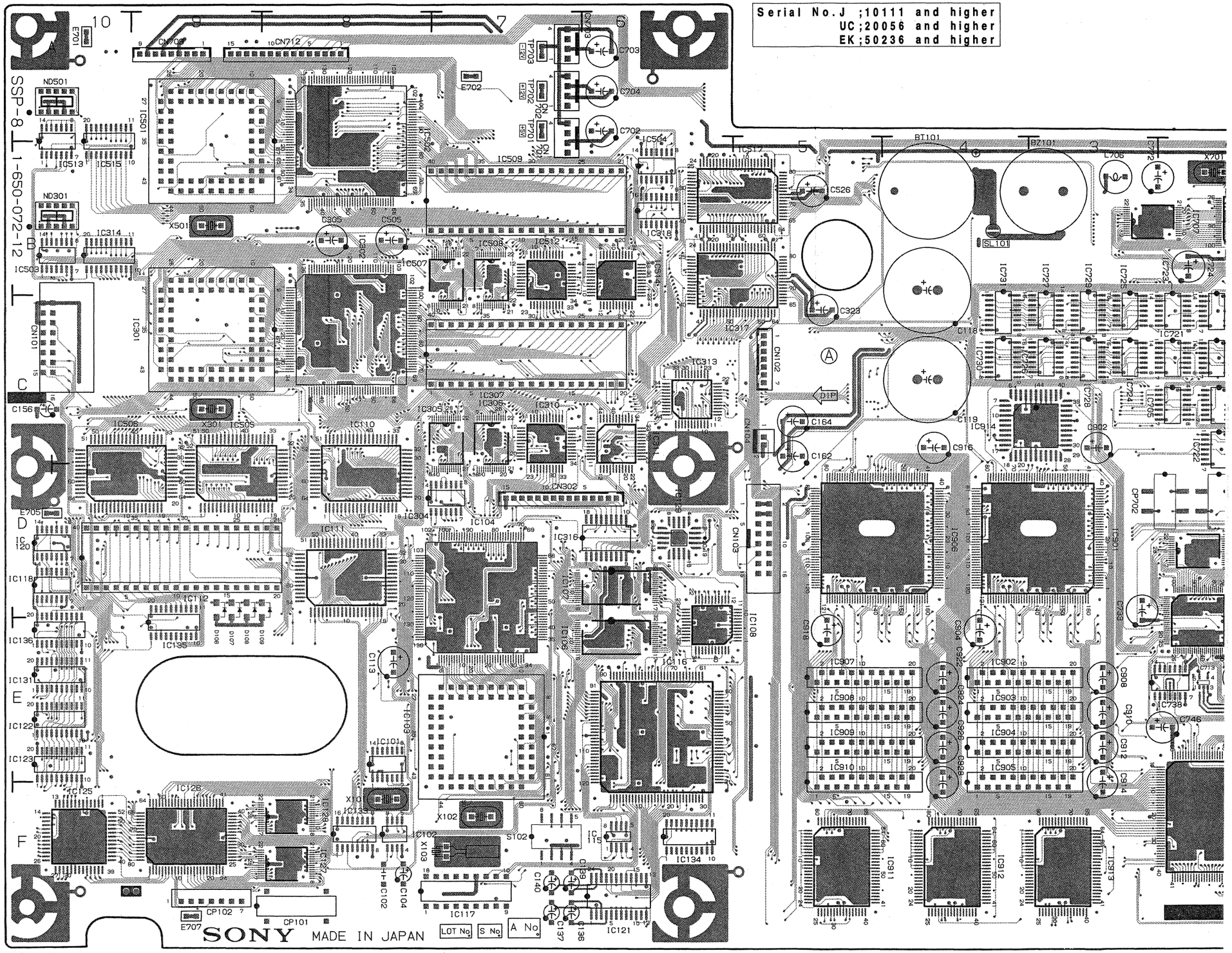

1-650-072-12 A SIDE

A Side is the same as Component Side.

Serial No.J ;10111 and higher
UC;20056 and higher
EK;50236 and higher

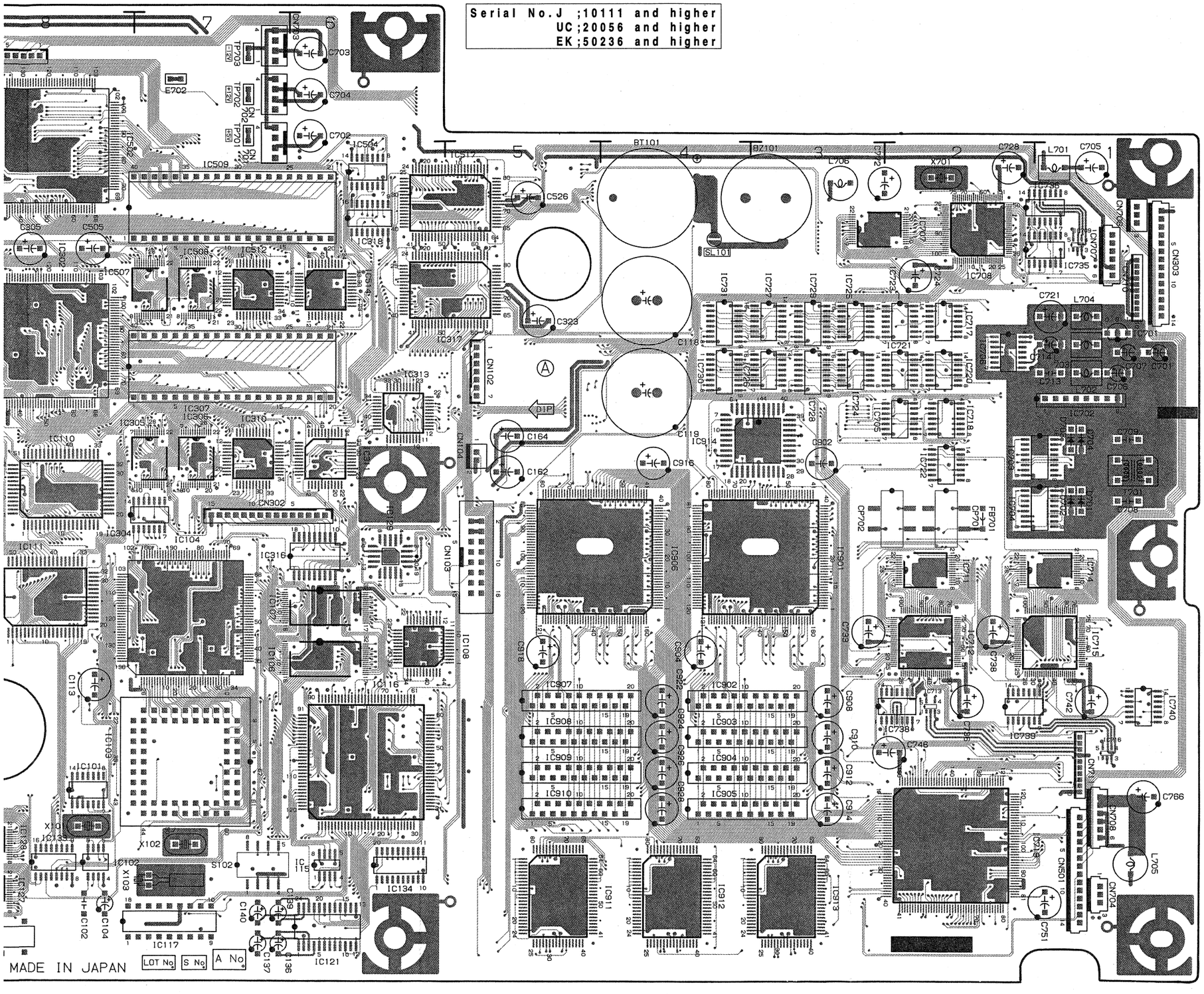

SSP-8 BOARD
B Side

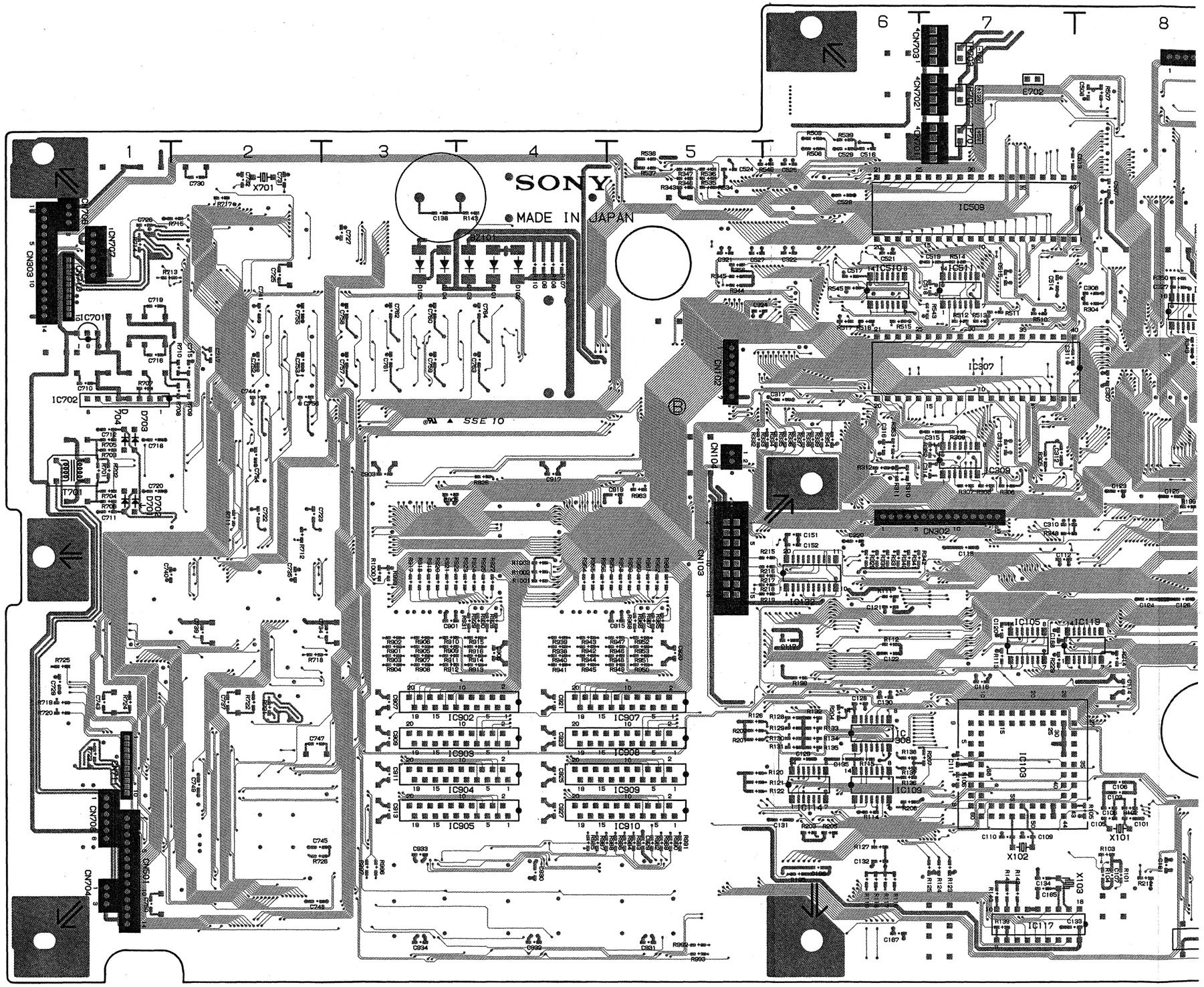

1-650-072-11 B SIDE

B Side is the same as Solder Side.

SSP-8

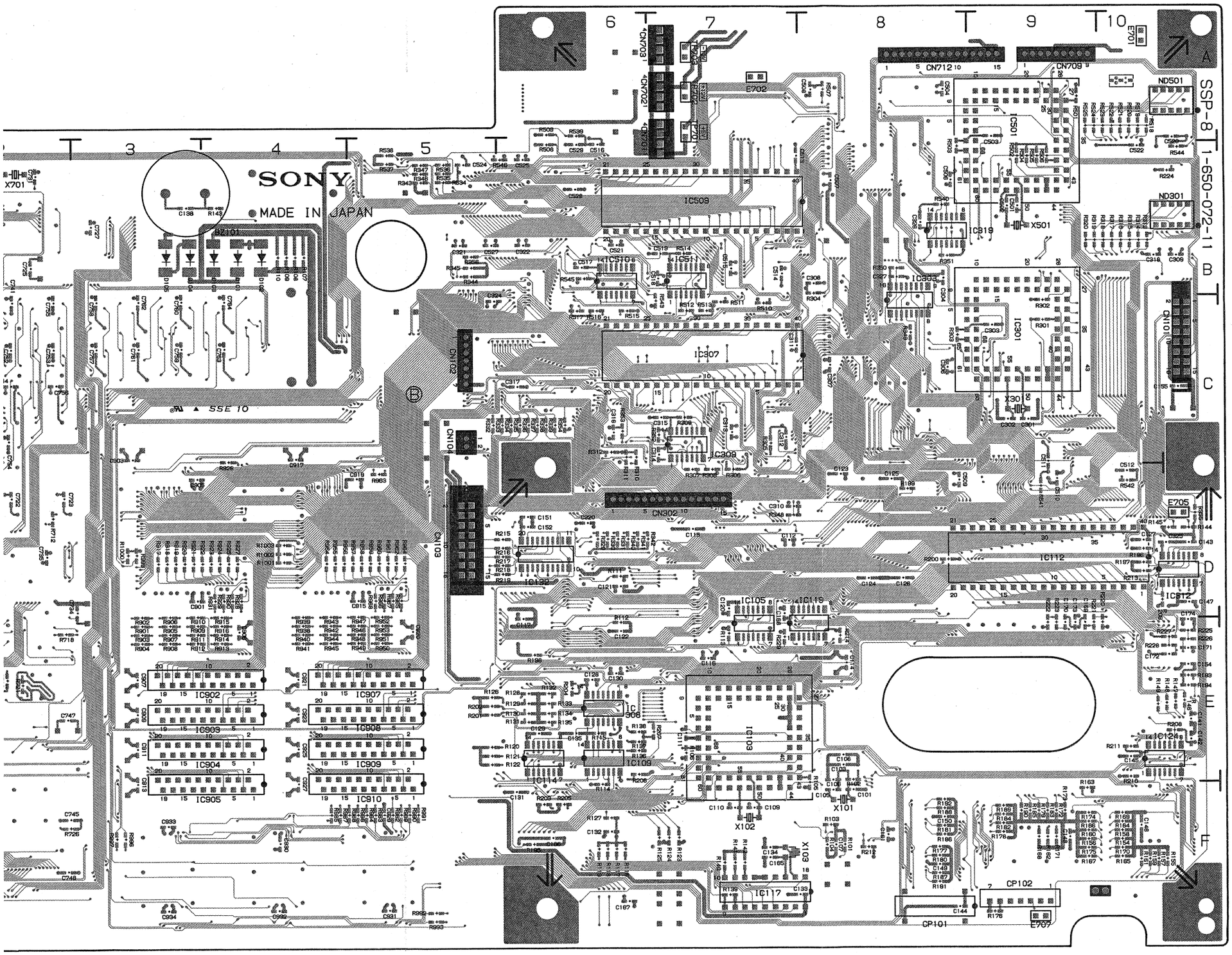

SSP-8 BOARD
1-650-072-11

CN101	C-10	IC120	D-10	IC712	E-3		
CN102	C-5	IC121	F-6	IC713	E-2		
CN103	D-5	IC122	E-10	IC714	D-1		
CN104	C-5	IC123	E-10	IC715	E-1		
CN302	D-7	IC124	*E-10	IC716	E-1		
CN303	B-1	IC125	F-10	IC717	C-2		
CN501	F-1	IC126	F-9	IC718	C-2		
CN701	B-7	IC127	F-8	IC719	F-3		
CN702	A-7	IC128	F-8	IC720	C-2		
CN703	A-6	IC129	D-6	IC721	C-2		
CN704	F-1	IC131	E-10	IC722	C-2		
CN706	B-1	IC132	*D-6	IC723	B-2		
CN707	B-1	IC133	F-8	IC724	C-3		
CN708	F-1	IC134	F-6	IC725	B-3		
CN709	A-9	IC135	E-9	IC726	C-3		
CN710	B-1	IC136	E-10	IC727	B-3		
CN711	E-1	IC301	C-9	IC728	C-3		
CN712	A-8	IC302	C-8	IC729	B-3		
		IC303	*B-8	IC730	C-4		
CP101	F-8	IC304	D-8	IC731	B-4		
CP102	F-9	IC305	C-8	IC732	B-2		
CP701	D-2	IC306	D-7	IC733	E-2		
CP702	D-3	IC307	C-7	IC734	E-1		
		IC308	*E-6	IC901	D-3		
D101	*B-4	IC309	*C-7	IC902	E-4		
D102	*B-4	IC310	C-7	IC903	E-4		
D103	*B-4	IC311	C-6	IC904	E-4		
D104	*B-3	IC312	*D-10	IC905	E-4		
D105	*B-3	IC313	C-6	IC906	D-4		
D106	E-9	IC314	B-10	IC907	E-5		
D107	E-9	IC316	D-7	IC908	E-5		
D108	E-9	IC317	C-5	IC909	E-5		
D109	E-8	IC318	B-6	IC910	E-5		
D701	D-1	IC319	*B-9	IC911	F-5		
D702	D-1	IC501	A-9	IC912	F-4		
D703	C-1	IC502	A-8	IC913	F-4		
D704	C-1	IC503	B-10				
		IC504	A-6	L701	B-1		
E701	A-10	IC505	D-8	L702	B-1		
E702	A-7	IC506	C-10	L703	C-1		
E705	D-10	IC507	B-8	L704	C-1		
E707	F-9	IC508	B-7				
		IC509	B-6	ND301	B-10		
IC101	E-8	IC510	*B-6	ND501	A-10		
IC102	F-8	IC511	*B-7				
IC103	E-8	IC512	B-7	S102	F-7		
IC104	E-7	IC513	B-10				
IC105	*D-7	IC514	B-6	TP701	A-7		
IC106	E-7	IC515	B-10	TP702	A-7		
IC107	D-7	IC517	B-6	TP703	A-7		
IC108	E-6	IC701	C-1				
IC109	*E-6	IC702	C-1	T701	D-1		
IC110	C-8	IC703	C-2				
IC111	E-8	IC704	D-2	X101	F-8		
IC112	D-9	IC705	C-3	X102	F-7		
IC114	*E-6	IC706	C-2	X103	F-8		
IC115	F-6	IC707	B-2	X301	C-9		
IC116	F-6	IC708	B-2	X501	B-9		
IC117	F-7	IC709	B-1	X701	B-2		
IC118	D-10	IC710	E-1				
IC119	*D-8	IC711	D-2				

*;B(Soldering)Side mount

4-5

SSP-8 BOARD
B Side

Serial No.
J ;10001 to 10110
UC;20001 to 20055
EK;50001 to 50235

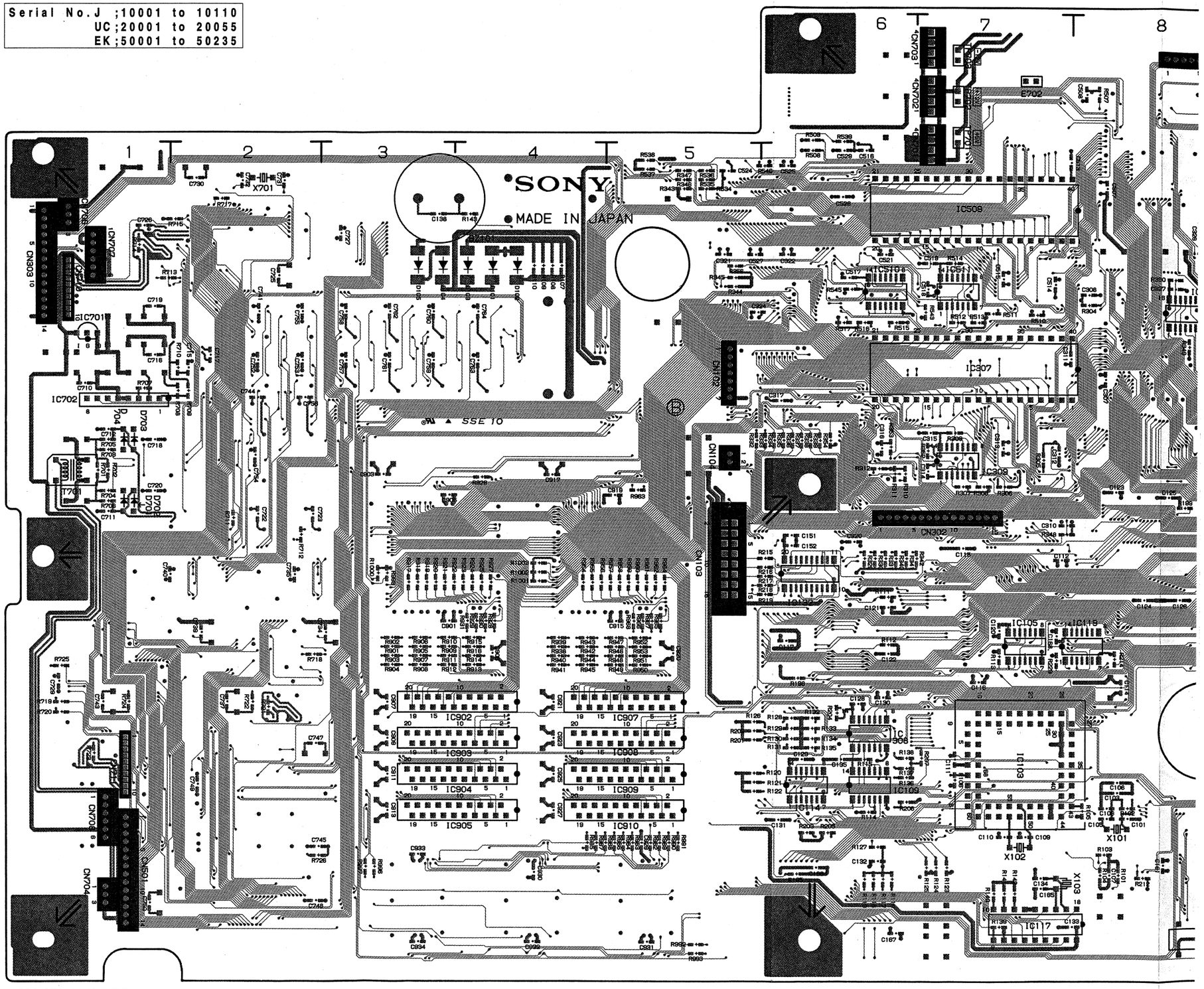

1-650-072-11 B SIDE

B Side is the same as Solder Side.

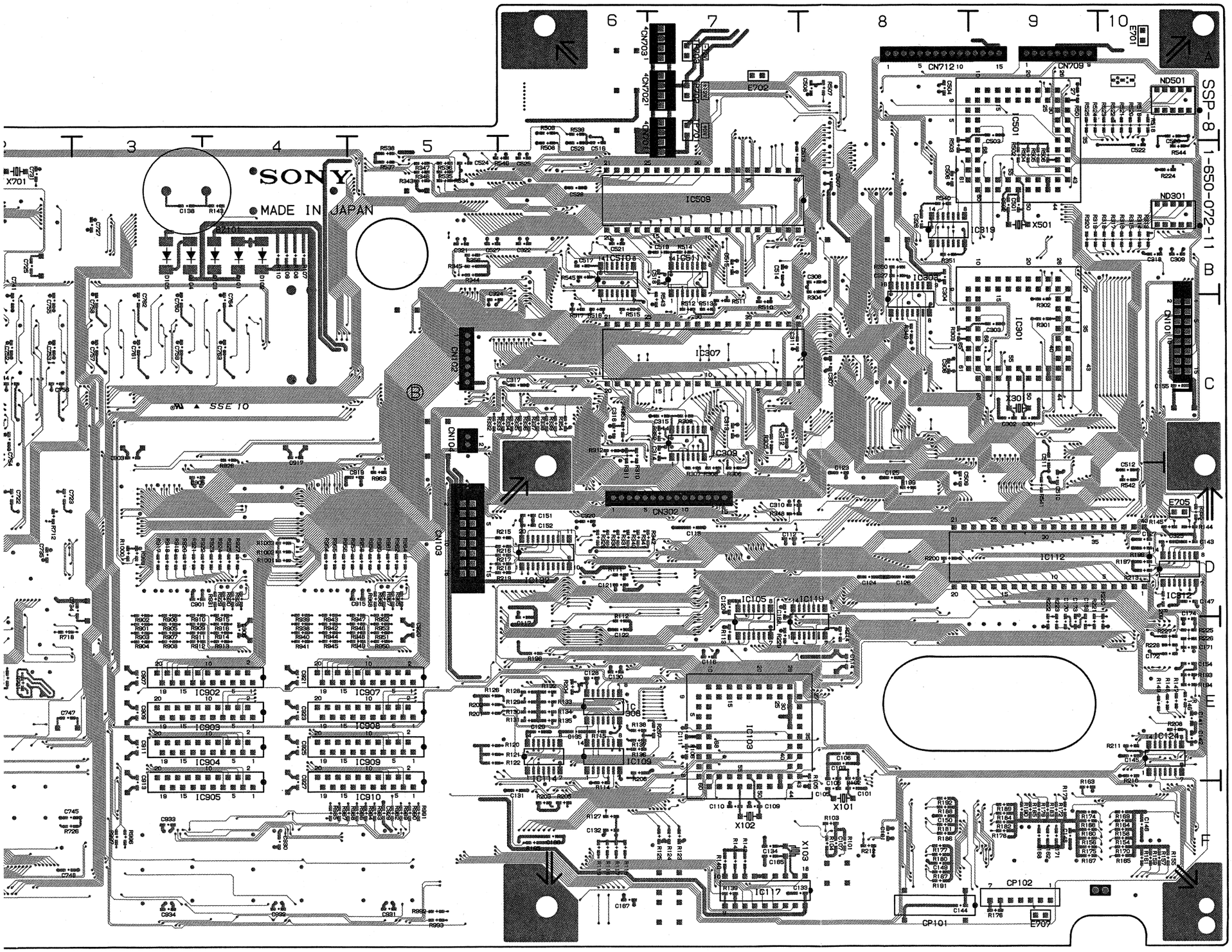

SSP-8 BOARD
1-650-072-11

CN101	C-10	IC120	D-10	IC712	E-3
CN102	C-5	IC121	F-6	IC713	E-2
CN103	D-5	IC122	E-10	IC714	D-1
CN104	C-5	IC123	E-10	IC715	E-1
CN302	D-7	IC124	*E-10	IC716	E-1
CN303	B-1	IC125	F-10	IC717	C-2
CN501	F-1	IC126	F-9	IC718	C-2
CN701	B-7	IC127	F-8	IC719	F-3
CN702	A-7	IC128	F-8	IC720	C-2
CN703	A-6	IC129	D-6	IC721	C-2
CN704	F-1	IC131	E-10	IC722	C-2
CN706	B-1	IC132	*D-6	IC723	B-2
CN707	B-1	IC133	F-8	IC724	C-3
CN708	F-1	IC134	F-6	IC725	B-3
CN709	A-9	IC135	E-9	IC726	C-3
CN710	B-1	IC136	E-10	IC727	B-3
CN711	E-1	IC301	C-9	IC728	C-3
CN712	A-8	IC302	C-8	IC729	B-3
		IC303	*B-8	IC730	C-4
CP101	F-8	IC304	D-8	IC731	B-4
CP102	F-9	IC305	C-8	IC732	B-2
CP701	D-2	IC306	D-7	IC733	E-2
CP702	D-3	IC307	C-7	IC734	E-1
		IC308	*E-6	IC901	D-3
D101	*B-4	IC309	*C-7	IC902	E-4
D102	*B-4	IC310	C-7	IC903	E-4
D103	*B-4	IC311	C-6	IC904	E-4
D104	*B-3	IC312	*D-10	IC905	E-4
D105	*B-3	IC313	C-6	IC906	D-4
D106	E-9	IC314	B-10	IC907	E-5
D107	E-9	IC316	D-7	IC908	E-5
D108	E-9	IC317	C-5	IC909	E-5
D109	E-8	IC318	B-6	IC910	E-5
D701	D-1	IC319	*B-9	IC911	F-5
D702	D-1	IC501	A-9	IC912	F-4
D703	C-1	IC502	A-8	IC913	F-4
D704	C-1	IC503	B-10		
		IC504	A-6	L701	B-1
E701	A-10	IC505	D-8	L702	B-1
E702	A-7	IC506	C-10	L703	C-1
E705	D-10	IC507	B-8	L704	C-1
E707	F-9	IC508	B-7		
		IC509	B-6	ND301	B-10
IC101	E-8	IC510	*B-6	ND501	A-10
IC102	F-8	IC511	*B-7		
IC103	E-8	IC512	B-7	S102	F-7
IC104	E-7	IC513	B-10		
IC105	*D-7	IC514	B-6	TP701	A-7
IC106	E-7	IC515	B-10	TP702	A-7
IC107	D-7	IC517	B-6	TP703	A-7
IC108	E-6	IC701	C-1		
IC109	*E-6	IC702	C-1	T701	D-1
IC110	C-8	IC703	C-2		
IC111	E-8	IC704	D-2	X101	F-8
IC112	D-9	IC705	C-3	X102	F-7
IC114	*E-6	IC706	C-2	X103	F-8
IC115	F-6	IC707	B-2	X301	C-9
IC116	F-6	IC708	B-2	X501	B-9
IC117	F-7	IC709	B-1	X701	B-2
IC118	D-10	IC710	E-1		
IC119	*D-8	IC711	D-2		

*;B(Soldering)Side mount

SSP-8 BOARD
B Side

Serial No.
J ;10111 and higher
UC ;20056 and higher
EK ;50236 and higher

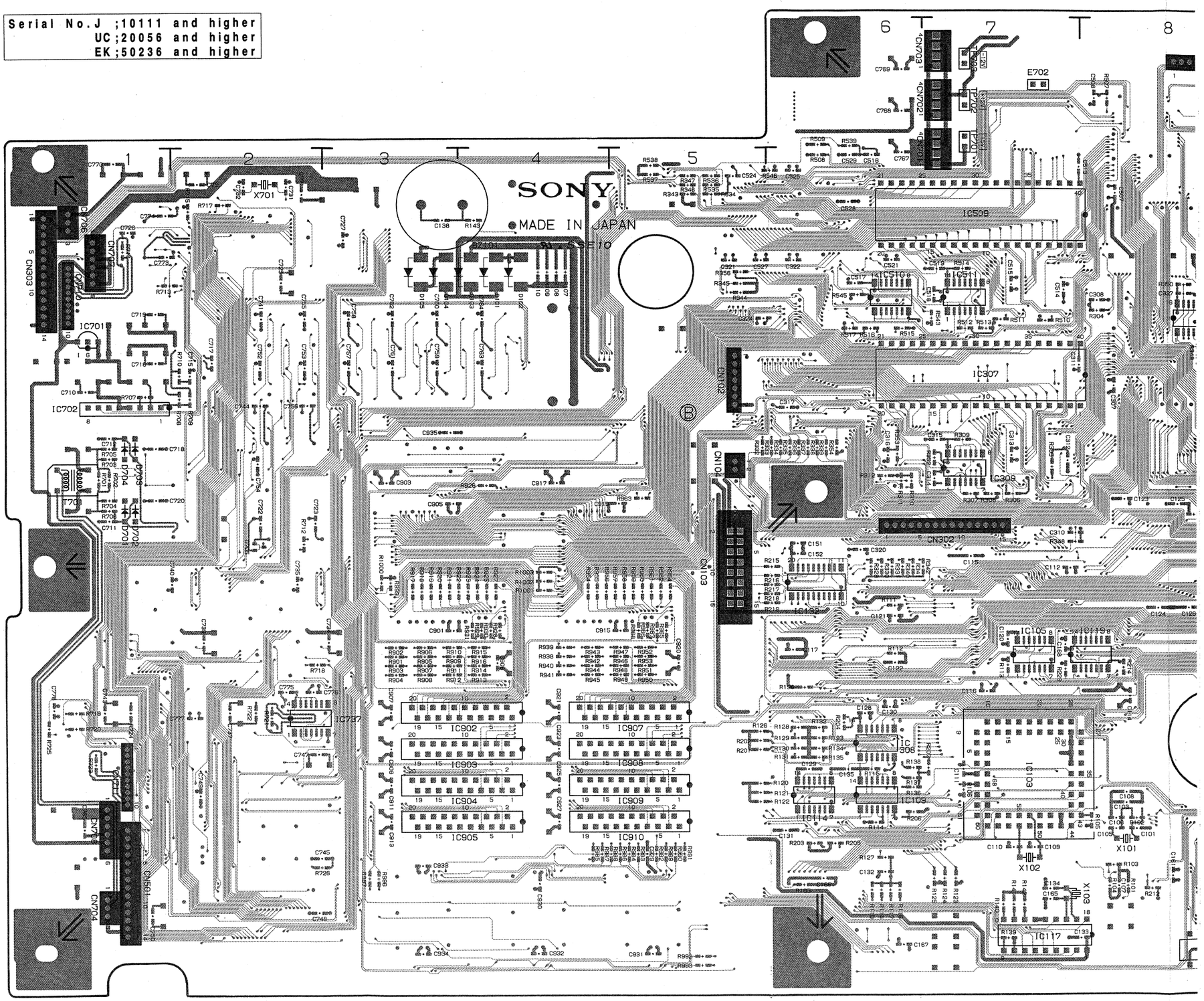

1-650-072-12 B SIDE

B Side is the same as Solder Side.

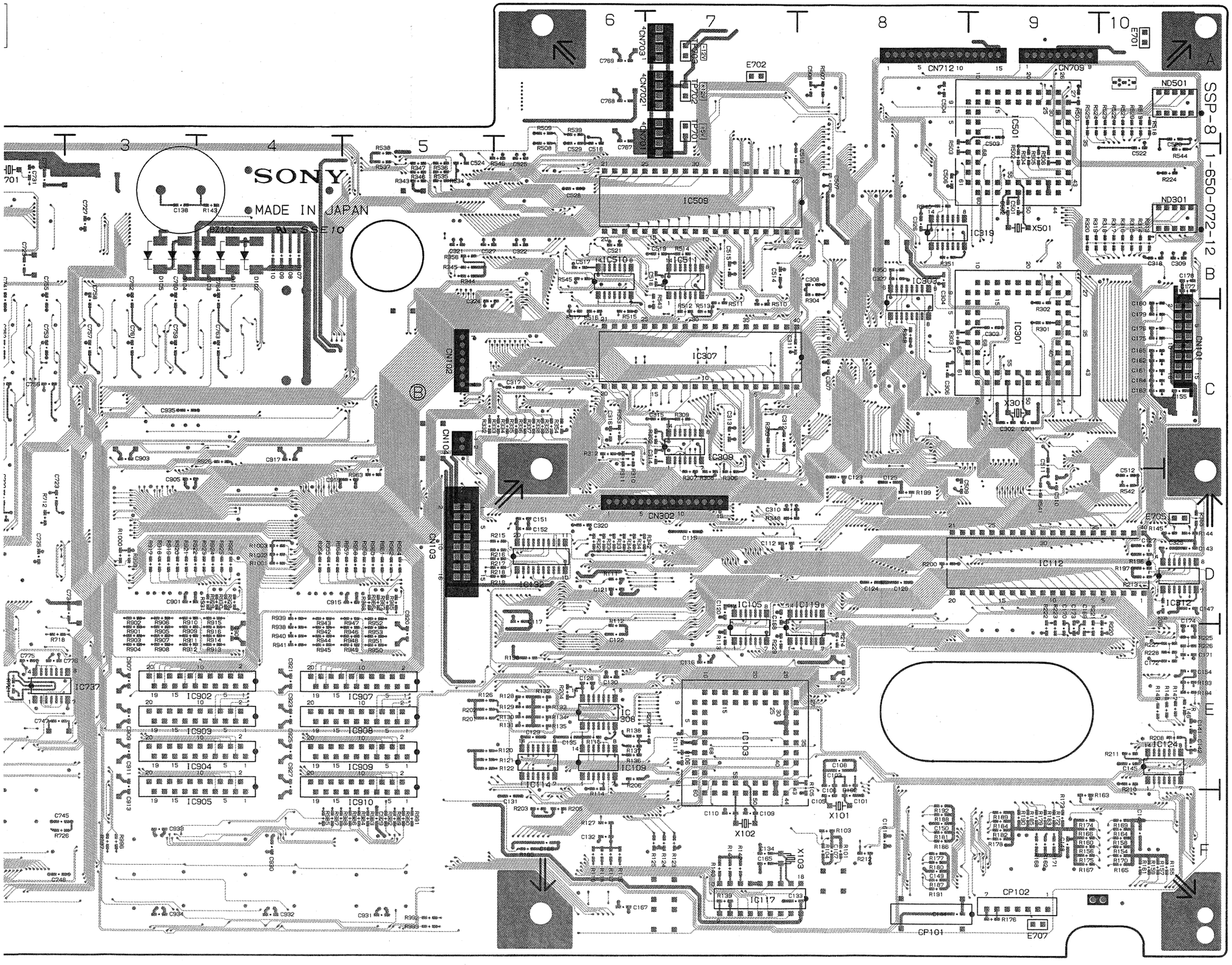

SSP-8 BOARD
1-650-072-12

CN101	C-10	IC121	F-6	IC716	E-1
CN102	C-5	IC122	E-10	IC717	C-2
CN103	D-5	IC123	E-10	IC718	C-2
CN104	C-5	IC124	*E-10	IC719	F-2
CN302	D-7	IC125	F-10	IC720	C-2
CN303	B-1	IC126	F-9	IC721	C-2
CN501	F-1	IC127	F-8	IC722	C-2
CN701	B-7	IC128	F-8	IC723	B-2
CN702	A-7	IC129	D-6	IC724	C-3
CN703	A-6	IC131	E-10	IC725	B-3
CN704	F-1	IC132	*D-6	IC726	C-4
CN706	B-1	IC133	F-8	IC727	B-3
CN707	B-1	IC134	F-6	IC728	C-3
CN708	F-1	IC135	E-9	IC729	B-3
CN709	A-9	IC136	E-10	IC730	C-4
CN710	B-1	IC301	C-9	IC731	B-4
CN711	E-1	IC302	B-8	IC735	B-1
CN712	A-8	IC303	*B-8	IC736	B-1
		IC304	D-8	IC737	*E-3
CP101	F-8	IC305	C-8	IC738	E-2
CP102	F-9	IC306	C-7	IC739	E-2
CP701	D-2	IC307	C-7	IC740	E-1
CP702	D-3	IC308	*E-6	IC901	D-3
		IC309	*C-7	IC902	E-4
D101	*B-4	IC310	C-7	IC903	E-4
D102	*B-4	IC311	C-6	IC904	E-4
D103	*B-4	IC312	*D-10	IC905	E-4
D104	*B-3	IC313	C-6	IC906	D-4
D105	*B-3	IC314	B-10	IC907	E-5
D106	E-9	IC316	D-7	IC908	E-5
D107	E-9	IC317	C-5	IC909	E-5
D108	E-9	IC318	B-6	IC910	E-5
D109	E-8	IC319	*B-9	IC911	F-4
D701	D-1	IC501	A-9	IC912	F-4
D702	D-1	IC502	A-8	IC913	F-3
D703	C-1	IC503	B-10	IC914	C-4
D704	C-1	IC504	B-6		
D705	*D-3	IC505	C-9	L701	B-1
		IC506	C-10	L702	C-1
E701	A-10	IC507	B-8	L703	C-1
E702	A-7	IC508	B-7	L704	B-1
E705	D-10	IC509	B-7	L705	F-1
E707	F-9	IC510	*B-6	L706	B-3
		IC511	*B-7		
IC101	E-8	IC512	B-7	ND301	B-10
IC102	F-8	IC513	B-10	ND501	A-10
IC103	E-8	IC514	B-6		
IC104	D-7	IC515	B-10	S102	F-7
IC105	*D-7	IC517	B-5		
IC106	E-7	IC701	C-1	TP701	A-7
IC107	D-7	IC702	C-1	TP702	A-7
IC108	E-5	IC703	C-2	TP703	A-7
IC109	*E-6	IC704	D-2		
IC110	C-8	IC705	C-3	T701	D-1
IC111	D-8	IC706	C-2		
IC112	D-9	IC707	B-2	X101	F-8
IC114	*E-6	IC708	B-2	X102	F-7
IC115	F-6	IC709	B-1	X103	F-8
IC116	E-6	IC711	D-2	X301	C-9
IC117	F-7	IC712	E-2	X501	B-9
IC118	D-10	IC713	E-2	X701	B-2
IC119	*D-8	IC714	D-1		
IC120	D-10	IC715	E-1		

*:B(Soldering)Side mount

SV-147 BOARD
A Side

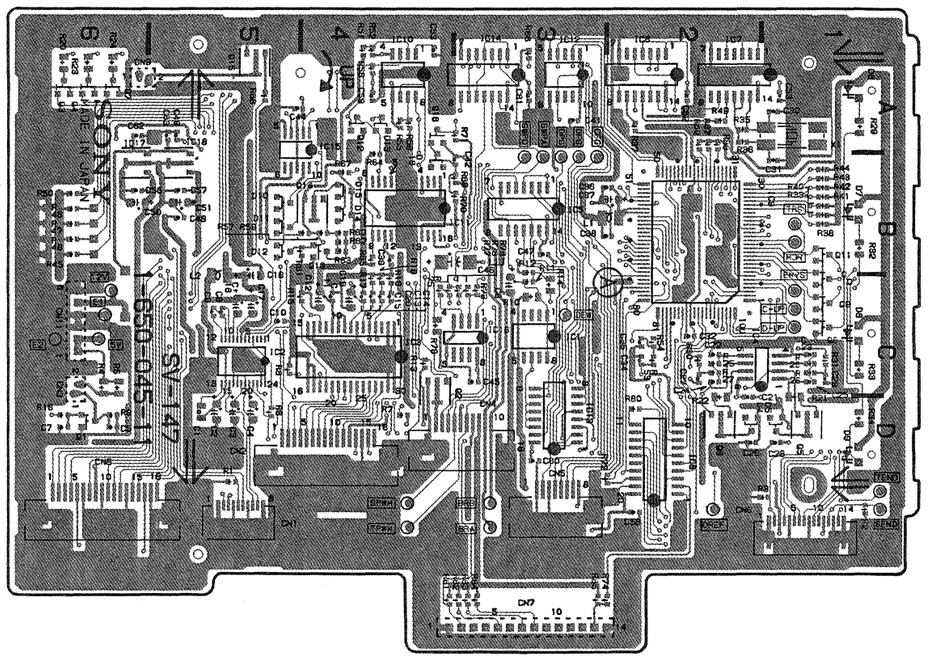

1-650-045-11 A SIDE

A Side is the same as Component Side.

DUS-736 BOARD

1-651-135-11 A SIDE

SV-147 BOARD
1-650-045-11

CN1	D-5	Q1	D-6
CN2	D-5	Q2	C-3
CN3	C-6	Q3	A-6
CN4	D-3	Q4	A-6
CN5	D-3	Q5	D-1
CN6	D-2	Q6	D-2
CN7	D-3	Q7	A-6
CN8	D-6	Q8	C-1
CN10	*D-6	Q9	C-1
CN11	C-6	Q10	C-1
		Q11	B-1
D1	*A-6	Q12	A-4
D2	*A-6	Q13	B-4
D3	*A-6	Q14	B-4
D4	D-2	Q15	A-5
D5	D-1	Q16	A-4
D6	A-1		
D7	B-1	S1	*B-6
D8	C-1		
D9	D-1	X1	A-1
D10	B-5		
D11	B-5		
D12	B-5		
D13	A-4		
D14	B-4		
D15	B-4		
D16	B-4		
IC1	C-3		
IC2	C-5		
IC3	C-4		
IC4	C-2		
IC5	B-3		
IC6	A-2		
IC7	A-2		
IC8	D-2		
IC9	B-1		
IC10	A-4		
IC11	B-3		
IC12	A-3		
IC13	D-3		
IC14	A-3		
IC15	A-4		
IC16	C-3		
IC17	A-6		
IC18	A-5		

*;B(Soldering)Side mount

SV-147 BOARD
B Side

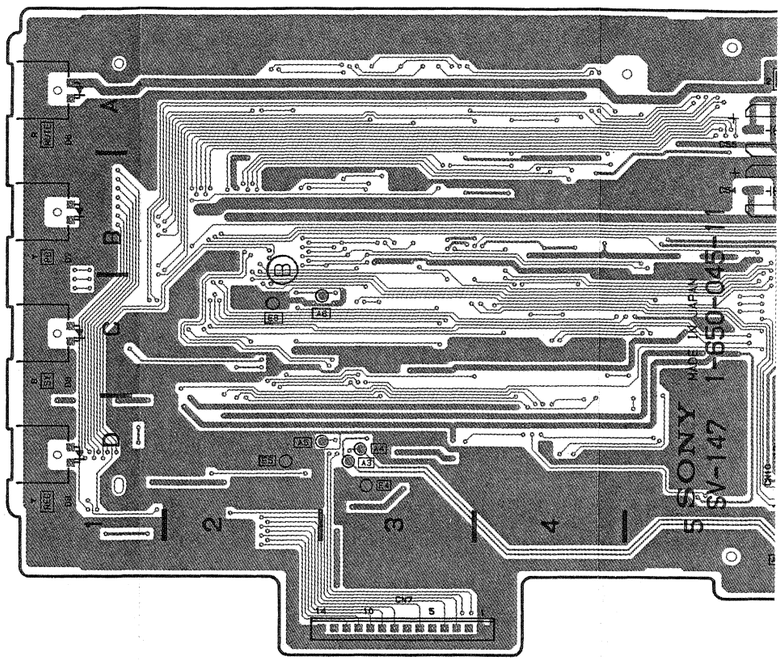

1-650-045-11 B SIDE

B Side is the same as Solder Side.

CAPSTAN FLEXIBLE BOARD

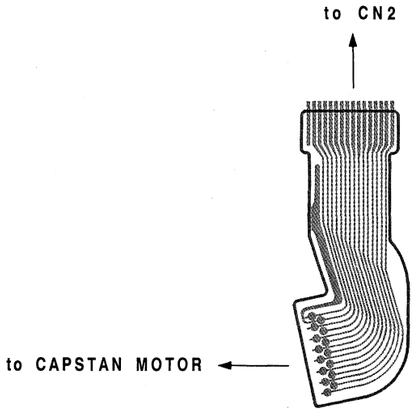

1-648-979-11

REEL FG.DEW FLEXIBLE BOARD

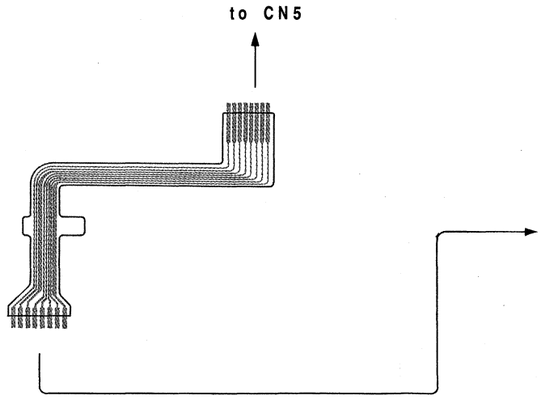

1-648-978-11

REEL FG BOARD

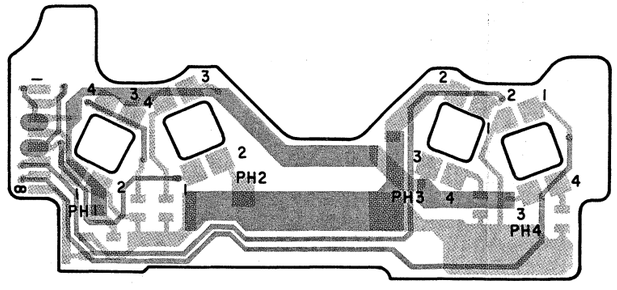

1-648-983-11 SOLDER SIDE PATTERN
1-648-983-11 COMPONENT SIDE PATTERN

RECOGNI END FLEXIBLE BC

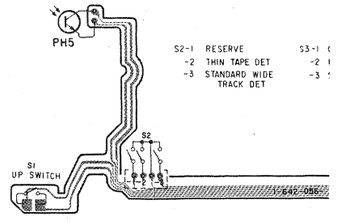

1-642-056-12

SV-147 BOARD
B Side

SV-147 BOARD
1-650-045-11

CN1	D-5	Q1	D-6
CN2	D-5	Q2	C-3
CN3	C-6	Q3	A-6
CN4	D-3	Q4	A-6
CN5	D-3	Q5	D-1
CN6	D-2	Q6	D-2
CN7	D-3	Q7	A-6
CN8	D-6	Q8	C-1
CN10	*D-6	Q9	C-1
CN11	C-6	Q10	C-1
		Q11	B-1
D1	*A-6	Q12	A-4
D2	*A-6	Q13	B-4
D3	*A-6	Q14	B-4
D4	D-2	Q15	A-5
D5	D-1	Q16	A-4
D6	A-1		
D7	B-1	S1	*B-6
D8	C-1		
D9	D-1	X1	A-1
D10	B-5		
D11	B-5		
D12	B-5		
D13	A-4		
D14	B-4		
D15	B-4		
D16	B-4		
IC1	C-3		
IC2	C-5		
IC3	C-4		
IC4	C-2		
IC5	B-3		
IC6	A-2		
IC7	A-2		
IC8	D-2		
IC9	B-1		
IC10	A-4		
IC11	B-3		
IC12	A-3		
IC13	D-3		
IC14	A-3		
IC15	A-4		
IC16	C-3		
IC17	A-6		
IC18	A-5		

*;B(Soldering)Side mount

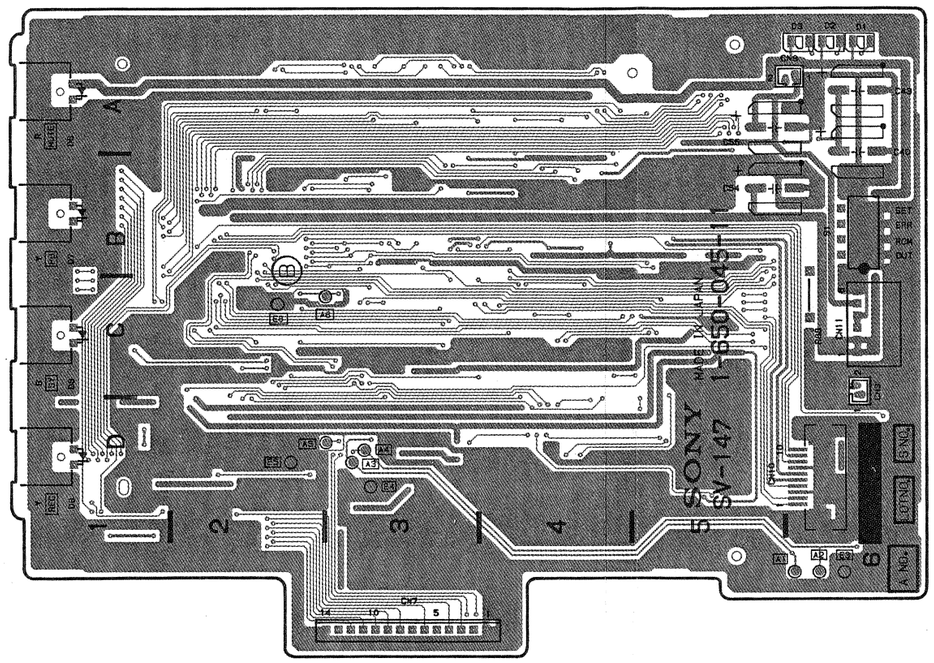

1-650-045-11 B SIDE

B Side is the same as Solder Side.

DUS-736 BOARD

1-651-135-11 A SIDE

.E BOARD

CN5

REEL FG BOARD

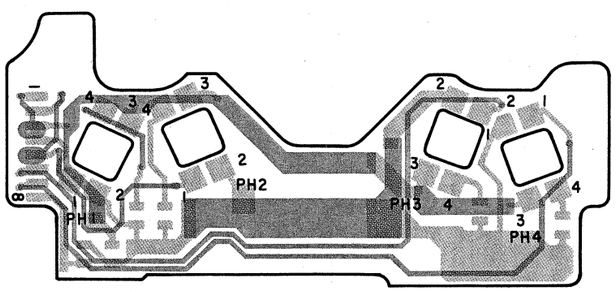

1-648-983-11 SOLDER SIDE PATTERN
1-648-983-11 COMPONENT SIDE PATTERN

GOMA BOARD

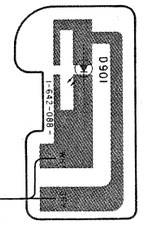

1-642-088-11

to CN3

TENREGI MOTOR ENCODER FLEXIBLE BOARD

to CN10

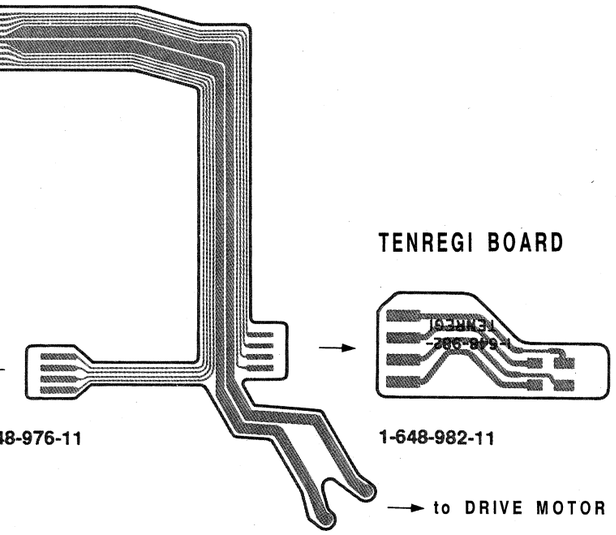

TENREGI BOARD

1-648-982-11

to DRIVE MOTOR

1-648-976-11

to ROTARY ENCODER

RECOGNI END FLEXIBLE BOARD

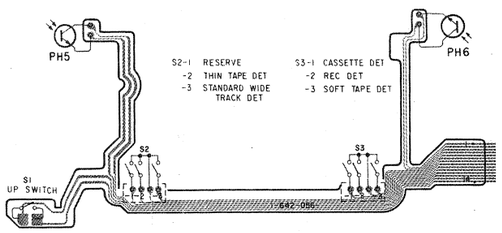

1-642-056-12

to CN6

SV-147 BOARD
A Side

Serial No.J ;10001 to 10110
UC ;20001 to 20055
EK ;50001 to 50235

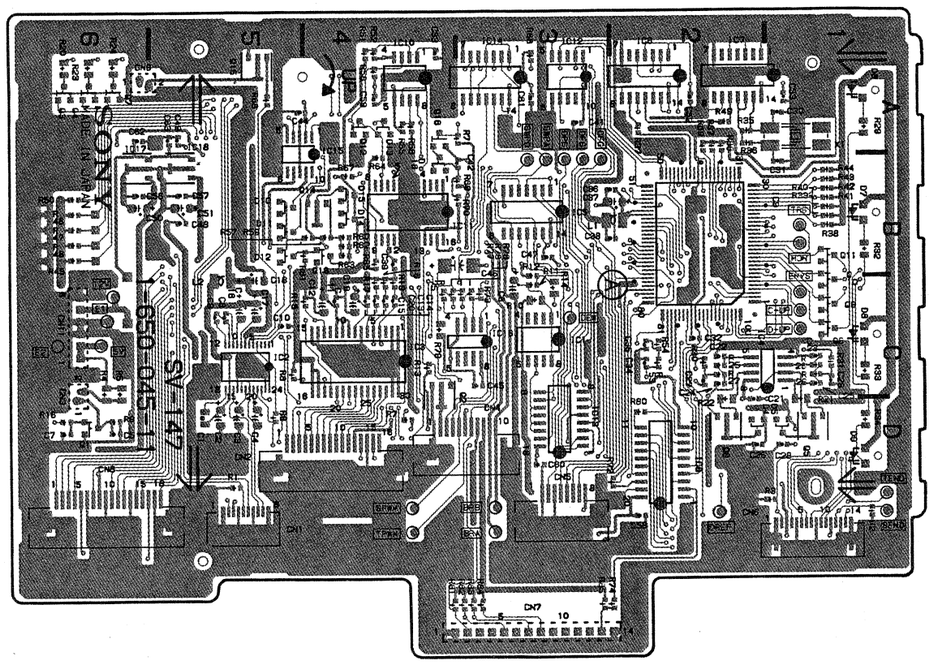

1-650-045-11 A SIDE

DUS-736 BOARD

Serial No.J ;10001 to 10110
UC ;20001 to 20055
EK ;50001 to 50235

1-651-135-11 A SIDE

SV-147 BOARD
1-650-045-11

CN1	D-5	Q1	D-6
CN2	D-5	Q2	C-3
CN3	C-6	Q3	A-6
CN4	D-3	Q4	A-6
CN5	D-3	Q5	D-1
CN6	D-2	Q6	D-2
CN7	D-3	Q7	A-6
CN8	D-6	Q8	C-1
CN10	*D-6	Q9	C-1
CN11	C-6	Q10	C-1
		Q11	B-1
D1	*A-6	Q12	A-4
D2	*A-6	Q13	B-4
D3	*A-6	Q14	B-4
D4	D-2	Q15	A-5
D5	D-1	Q16	A-4
D6	A-1		
D7	B-1	S1	*B-6
D8	C-1		
D9	D-1	X1	A-1
D10	B-5		
D11	B-5		
D12	B-5		
D13	A-4		
D14	B-4		
D15	B-4		
D16	B-4		
IC1	C-3		
IC2	C-5		
IC3	C-4		
IC4	C-2		
IC5	B-3		
IC6	A-2		
IC7	A-2		
IC8	D-2		
IC9	B-1		
IC10	A-4		
IC11	B-3		
IC12	A-3		
IC13	D-3		
IC14	A-3		
IC15	A-4		
IC16	C-3		
IC17	A-6		
IC18	A-5		

*;B(Soldering)Side mount

SV-147 BOARD
B Side

Serial No.J ;10001 to 10110
UC ;20001 to 20055
EK ;50001 to 50235

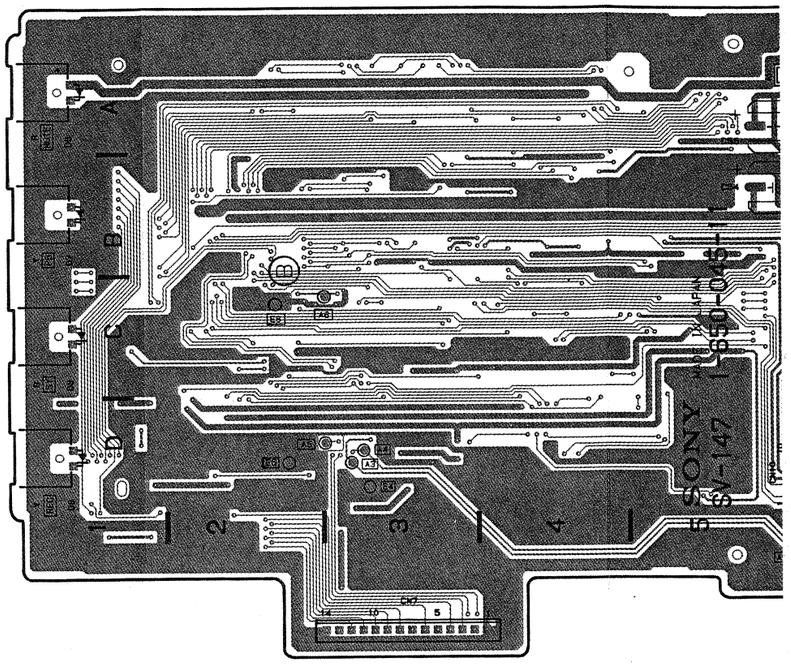

1-650-045-11 B SIDE

A Side is the same as Component Side.

B Side is the same as Solder Side.

CAPSTAN FLEXIBLE BOARD

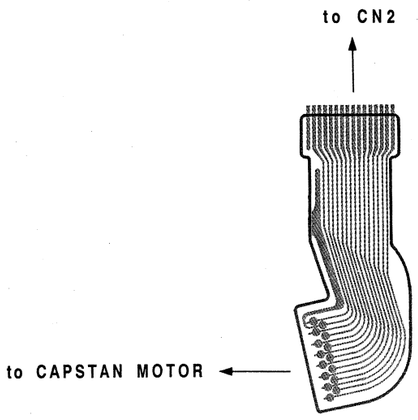

1-648-979-11

REEL FG.DEW FLEXIBLE BOARD

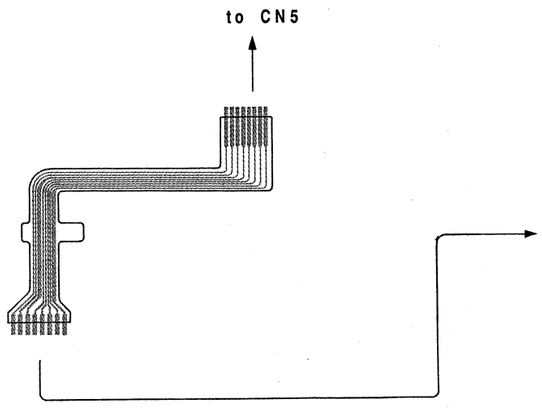

1-648-978-11

REEL FG BOARD

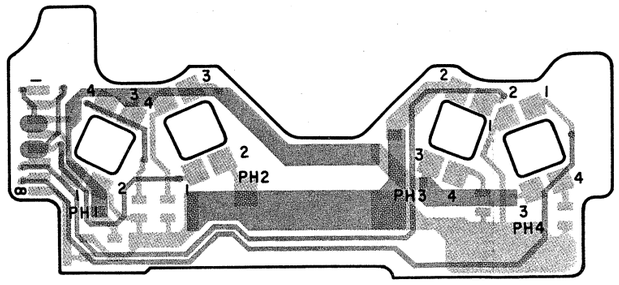

1-648-983-11 SOLDER SIDE PATTERN
1-648-983-11 COMPONENT SIDE PATTERN

RECOGNI END FLEXIBLE BO

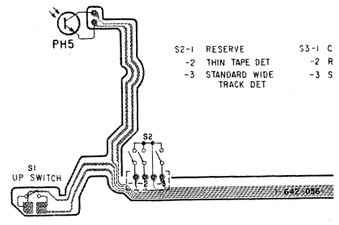

1-642-056-12

-736 BOARD

al No.J ;10001 to 10110
UC;20001 to 20055
EK;50001 to 50235

-135-11 A SIDE

SV-147 BOARD
B Side

Serial No.J ;10001 to 10110
UC;20001 to 20055
EK;50001 to 50235

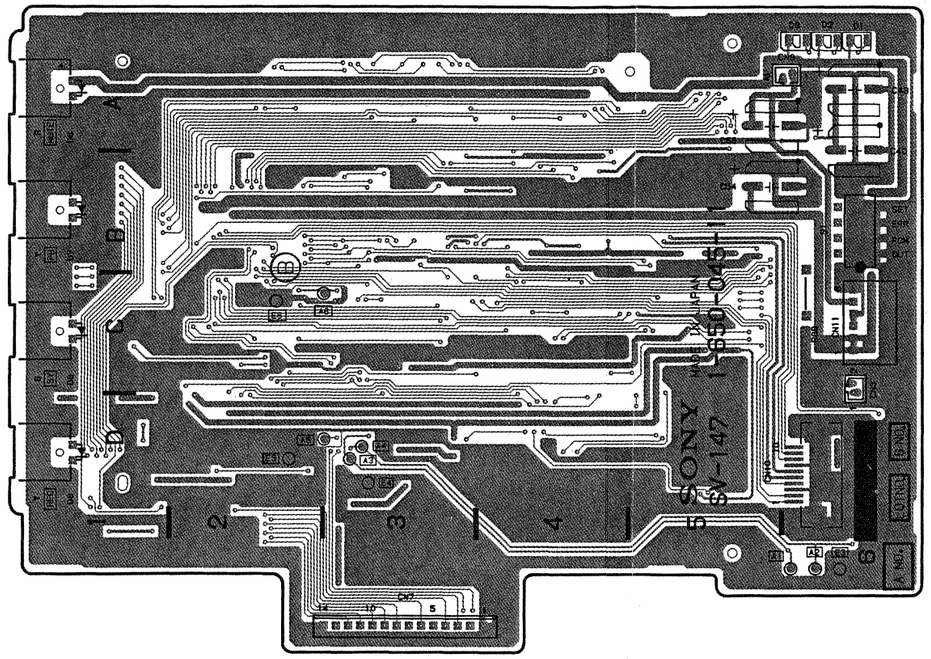

1-650-045-11 B SIDE

B Side is the same as Solder Side.

SV-147 BOARD
1-650-045-11

CN1	D-5	Q1	D-6
CN2	D-5	Q2	C-3
CN3	C-6	Q3	A-6
CN4	D-3	Q4	A-6
CN5	D-3	Q5	D-1
CN6	D-2	Q6	D-2
CN7	D-3	Q7	A-6
CN8	D-6	Q8	C-1
CN10	*D-6	Q9	C-1
CN11	C-6	Q10	C-1
		Q11	B-1
D1	*A-6	Q12	A-4
D2	*A-6	Q13	B-4
D3	*A-6	Q14	B-4
D4	D-2	Q15	A-5
D5	D-1	Q16	A-4
D6	A-1		
D7	B-1	S1	*B-6
D8	C-1		
D9	D-1	X1	A-1
D10	B-5		
D11	B-5		
D12	B-5		
D13	A-4		
D14	B-4		
D15	B-4		
D16	B-4		
IC1	C-3		
IC2	C-5		
IC3	C-4		
IC4	C-2		
IC5	B-3		
IC6	A-2		
IC7	A-2		
IC8	D-2		
IC9	B-1		
IC10	A-4		
IC11	B-3		
IC12	A-3		
IC13	D-3		
IC14	A-3		
IC15	A-4		
IC16	C-3		
IC17	A-6		
IC18	A-5		

*:B(Soldering)Side mount

GOMA BOARD

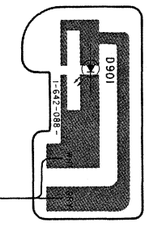

1-642-088-11

to CN3

TENREGI MOTOR ENCODER FLEXIBLE BOARD

to CN10

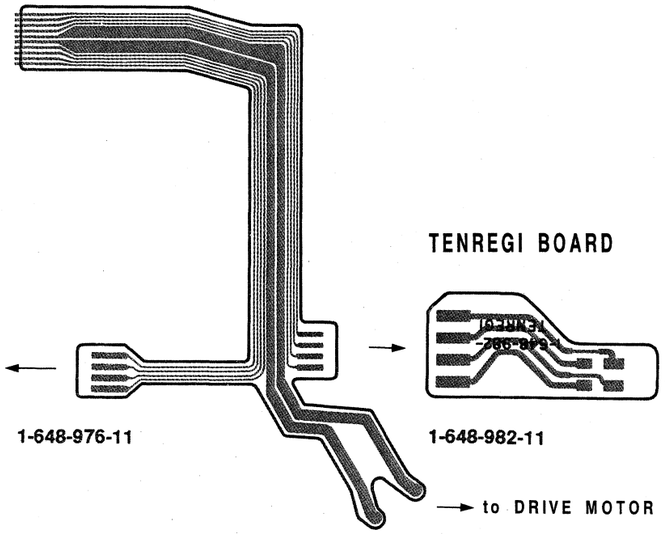

TENREGI BOARD

1-648-976-11

1-648-982-11

to DRIVE MOTOR

-E BOARD

CN5

REEL FG BOARD

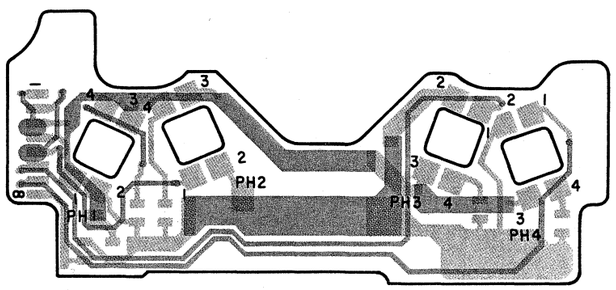

1-648-983-11 SOLDER SIDE PATTERN
1-648-983-11 COMPONENT SIDE PATTERN

RECOGNI END FLEXIBLE BOARD

to ROTARY ENCODER

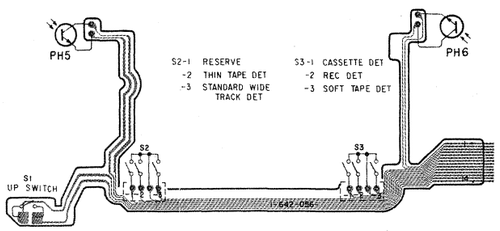

1-642-056-12

to CN6

SV-147 BOARD
A Side

Serial No.J ;10111 and higher
UC;20056 and higher
EK;50236 and higher

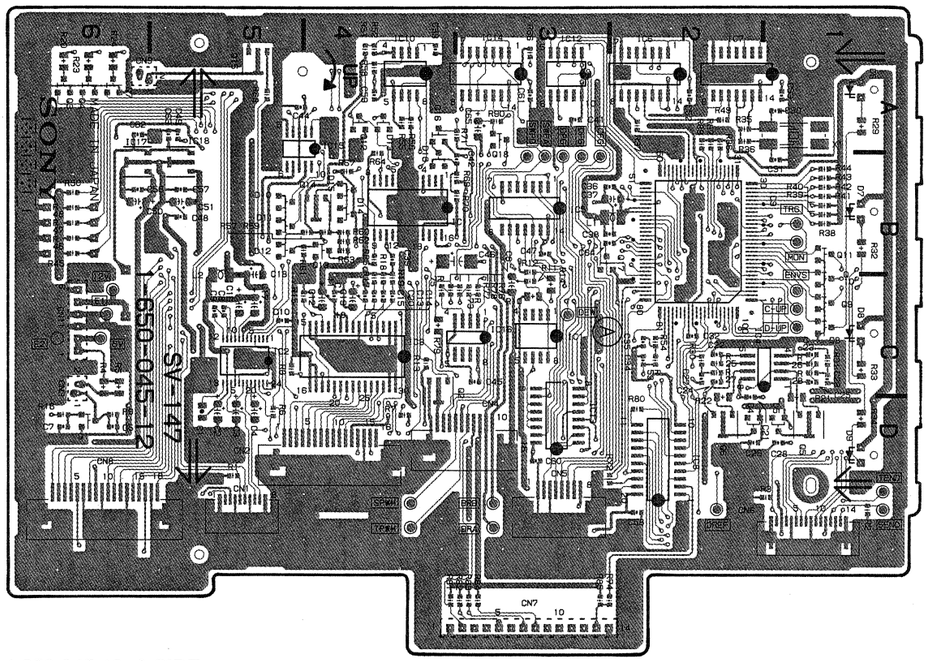

1-650-045-12 A SIDE

A Side is the same as Component Side.

SV-147 BOARD
1-650-045-12

CN1	D-5	L1	B-3
CN2	D-5	L2	B-5
CN3	C-6		
CN4	D-3	Q1	D-6
CN5	D-3	Q2	C-3
CN6	D-2	Q3	A-6
CN7	D-3	Q4	A-6
CN8	D-6	Q5	D-1
CN10	*D-6	Q6	D-2
CN11	C-6	Q7	A-6
		Q8	C-1
D1	*A-6	Q9	C-1
D2	*A-6	Q10	C-1
D3	*A-6	Q11	B-1
D4	D-2	Q12	A-4
D5	D-1	Q13	B-4
D6	A-1	Q14	B-4
D7	B-1	Q15	A-5
D8	C-1	Q16	A-4
D9	D-1	Q17	B-2
D10	B-5	Q18	B-3
D11	B-5		
D12	B-5	S1	*B-6
D13	A-4		
D14	B-4	X1	A-1
D15	B-4		
D16	B-4		
IC1	C-3		
IC2	C-5		
IC3	C-4		
IC4	C-2		
IC5	B-3		
IC6	A-2		
IC7	A-2		
IC8	D-2		
IC9	B-1		
IC10	A-4		
IC11	B-3		
IC12	A-3		
IC13	D-3		
IC14	A-3		
IC15	A-4		
IC16	C-3		
IC17	A-6		
IC18	A-5		

*;B(Soldering)Side mount

SV-147 BOARD
B Side

Serial No.J ;10111 and higher
UC;20056 and higher
EK;50236 and higher

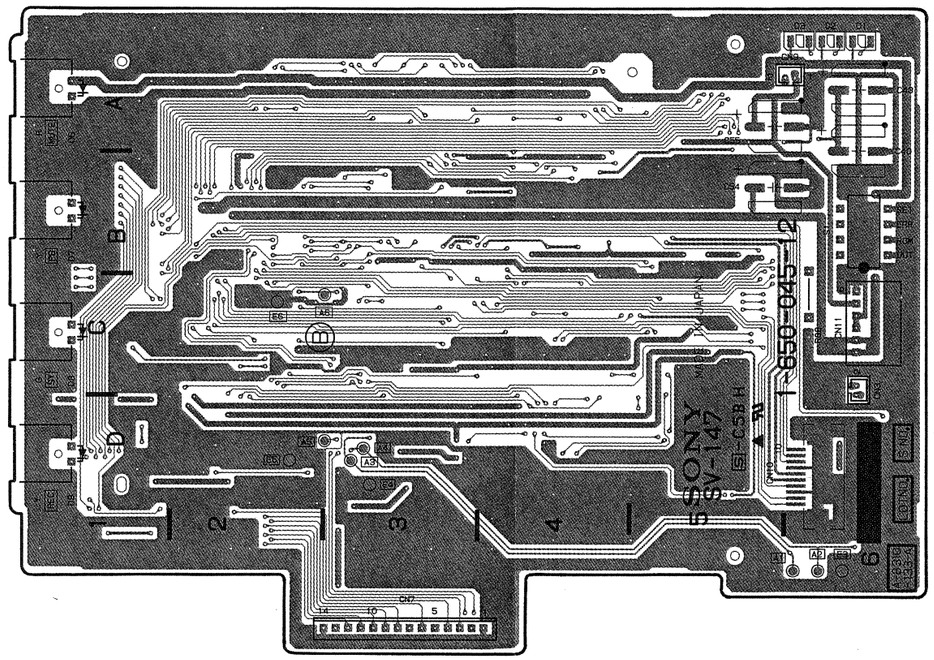

1-650-045-12 B SIDE

B Side is the same as Solder Side.

RF-53 BOARD
A Side

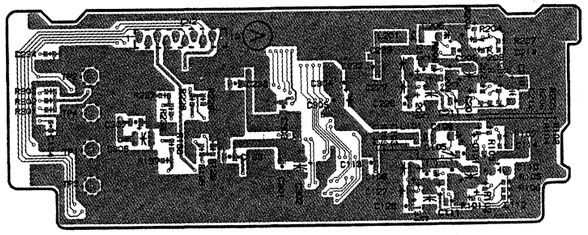

1-650-046-11 A SIDE

A Side is the same as Component Side.

RF-53 BOARD
B Side

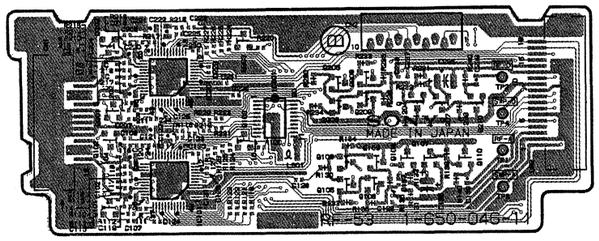

1-650-046-11 B SIDE

B Side is the same as Solder Side.

CP-233A/233B BOARD
A Side

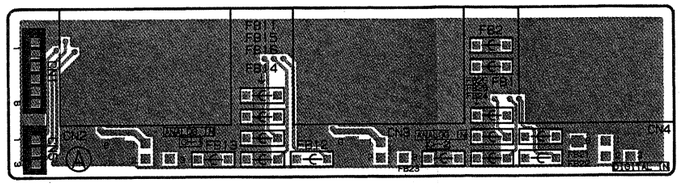

1-650-076-11 A SIDE

A Side is the same as Component Side.

CP-233A/233B BOARD
B Side

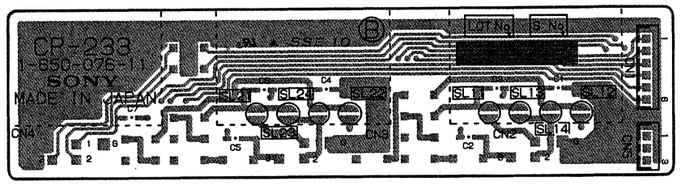

1-650-076-11 B SIDE

B Side is the same as Solder Side.

CP-234 BOARD
A Side

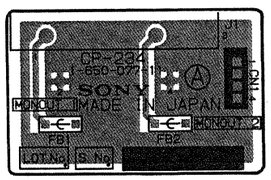

1-650-077-11 A SIDE

A Side is the same as Component Side.

CP-234 BOARD
B Side

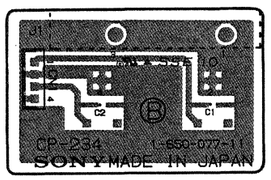

1-650-077-11 B SIDE

B Side is the same as Solder Side.

HP-57 BOARD
A Side

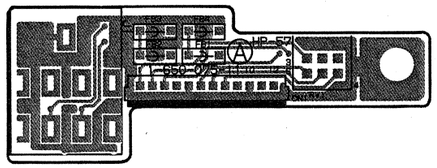

1-650-075-11 A SIDE

A Side is the same as Component Side.

HP-57 BOARD
B Side

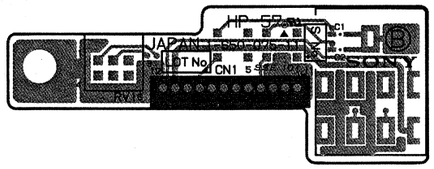

1-650-075-11 B SIDE

B Side is the same as Solder Side.

LED-160 BOARD
A Side

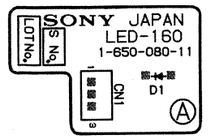

1-650-080-11 A SIDE

A Side is the same as Component Side.

LED-160 BOARD
B Side

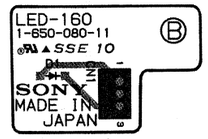

1-650-080-11 B SIDE

B Side is the same as Solder Side.

KY-247 BOARD
A Side

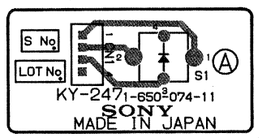

1-650-074-11 A SIDE

A Side is the same as Component Side.

KY-247 BOARD
B Side

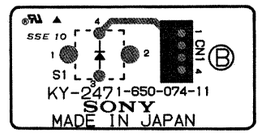

1-650-074-11 B SIDE

B Side is the same as Solder Side.

VR-154 BOARD
A Side

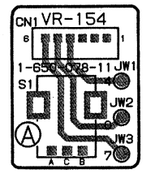

1-650-078-11 A SIDE

A Side is the same as Component Side.

VR-154 BOARD
B Side

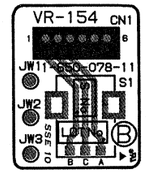

1-650-078-11 B SIDE

B Side is the same as Solder Side.

VR-181 BOARD
A Side

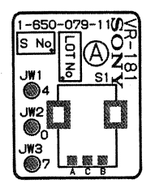

1-650-079-11 A SIDE

A Side is the same as Component Side.

VR-181 BOARD
B Side

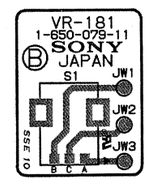

1-650-079-11 B SIDE

B Side is the same as Solder Side.

RF-53 BOARD
A Side

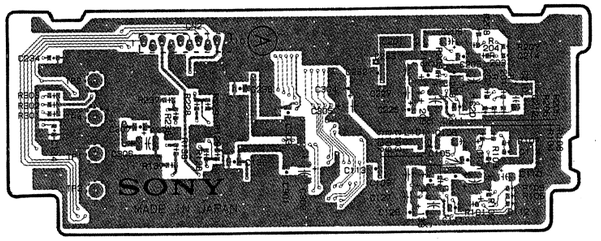

1-650-046-11,12 A SIDE

A Side is the same as Component Side.

RF-53 BOARD
B Side

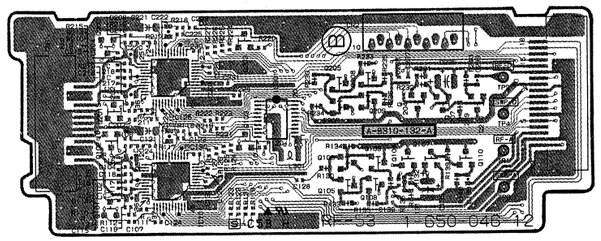

1-650-046-11,12 B SIDE

B Side is the same as Solder Side.

CP-233A/233B BOARD
A Side

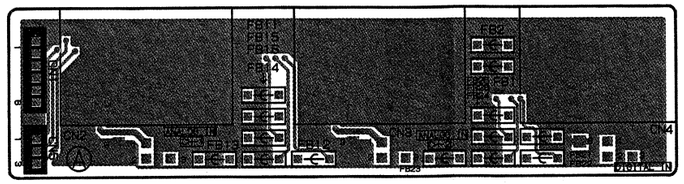

1-650-076-11 A SIDE

A Side is the same as Component Side.

CP-233A/233B BOARD
B Side

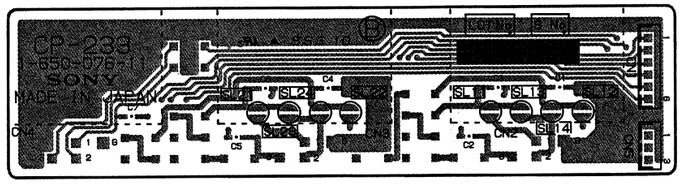

1-650-076-11 B SIDE

B Side is the same as Solder Side.

CP-234 BOARD
A Side

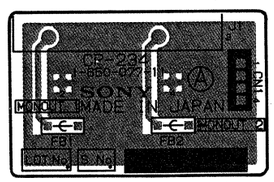

1-650-077-11 A SIDE

A Side is the same as Component Side.

CP-234 BOARD
B Side

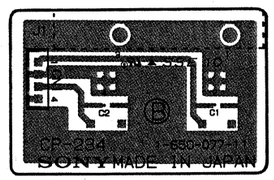

1-650-077-11 B SIDE

B Side is the same as Solder Side.

HP-57 BOARD
A Side

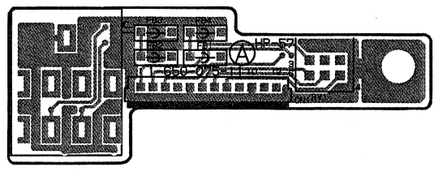

1-650-075-11 A SIDE

A Side is the same as Component Side.

HP-57 BOARD
B Side

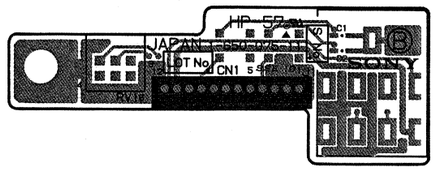

1-650-075-11 B SIDE

B Side is the same as Solder Side.

LED-160 BOARD
A Side

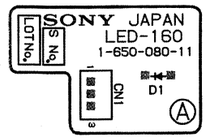

1-650-080-11 A SIDE

A Side is the same as Component Side.

LED-160 BOARD
B Side

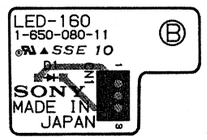

1-650-080-11 B SIDE

B Side is the same as Solder Side.

KY-247 BOARD
A Side

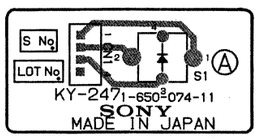

1-650-074-11 A SIDE

A Side is the same as Component Side.

KY-247 BOARD
B Side

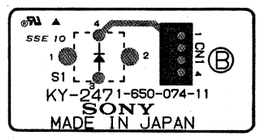

1-650-074-11 B SIDE

B Side is the same as Solder Side.

VR-154 BOARD
A Side

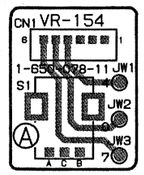

1-650-078-11 A SIDE

A Side is the same as Component Side.

VR-154 BOARD
B Side

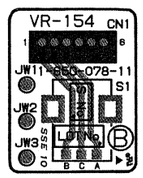

1-650-078-11 B SIDE

B Side is the same as Solder Side.

VR-181 BOARD
A Side

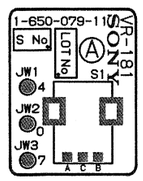

1-650-079-11 A SIDE

A Side is the same as Component Side.

VR-181 BOARD
B Side

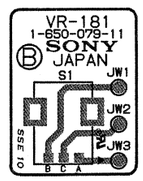

1-650-079-11 B SIDE

B Side is the same as Solder Side.

SECTION 5
SCHEMATIC DIAGRAMS

	Board	Function	Page
A	ADA-31	Rec Audio,A/D Converter,PB Audio,D/A Converter	5-2
R	RF-53	RF Amplifier	5-12
S	SSP-8	System Control,Signal Processor	5-4
	SV-147	Servo	5-13
	Frame wiring		5-14

OTHERS

GOMA 5-13
RECOGNI END FLEXIBLE 5-13
REEL FG 5-13

ADA-31 BOARD (1/2)

c Audio,A/D Converter
, Audio,D/A Converter

Serial No.	
J	10081 to 10110
UC	20036 to 20055
EK	50156 to 50235

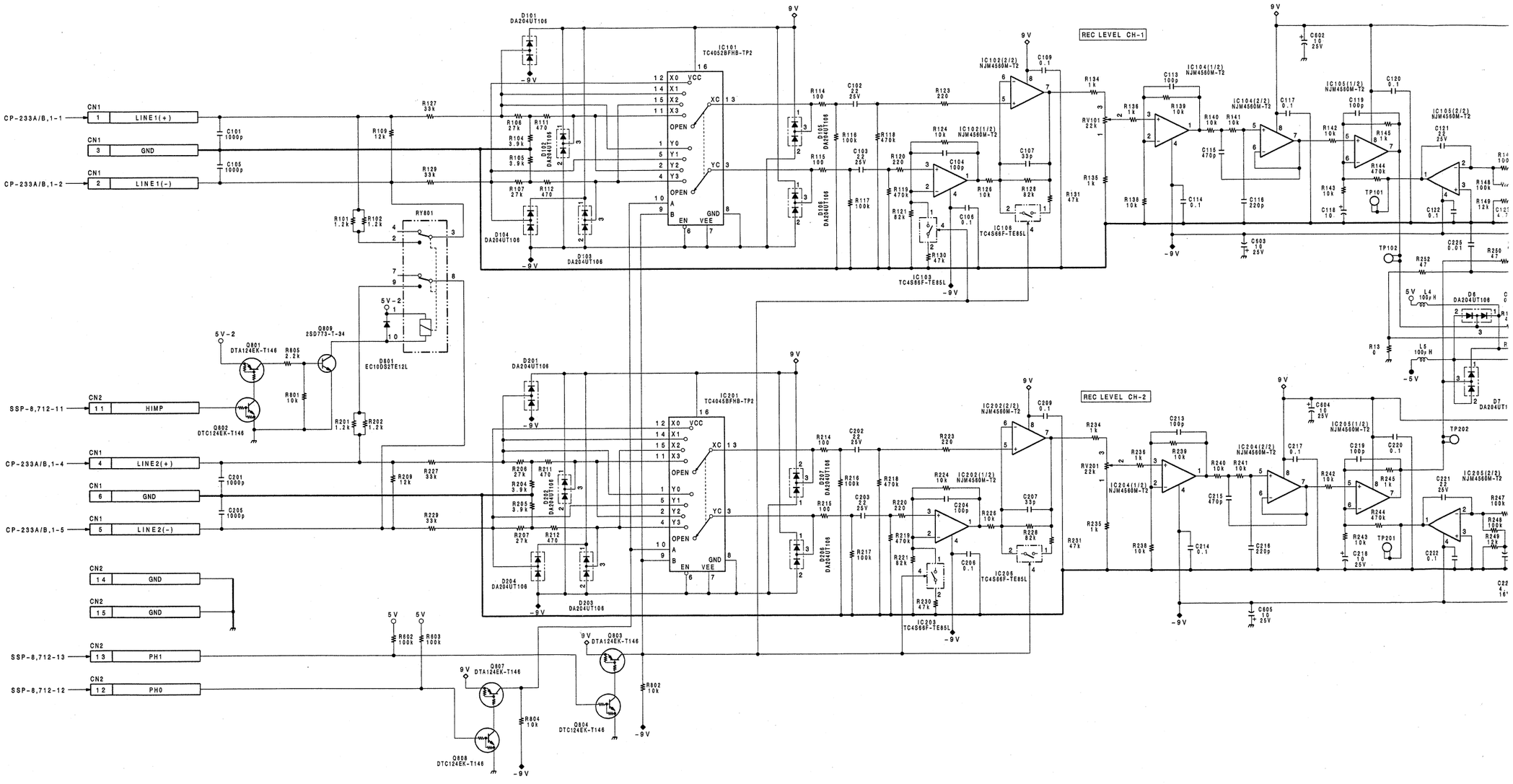

5-2(b)

A | B | C | D | E | F | G | H

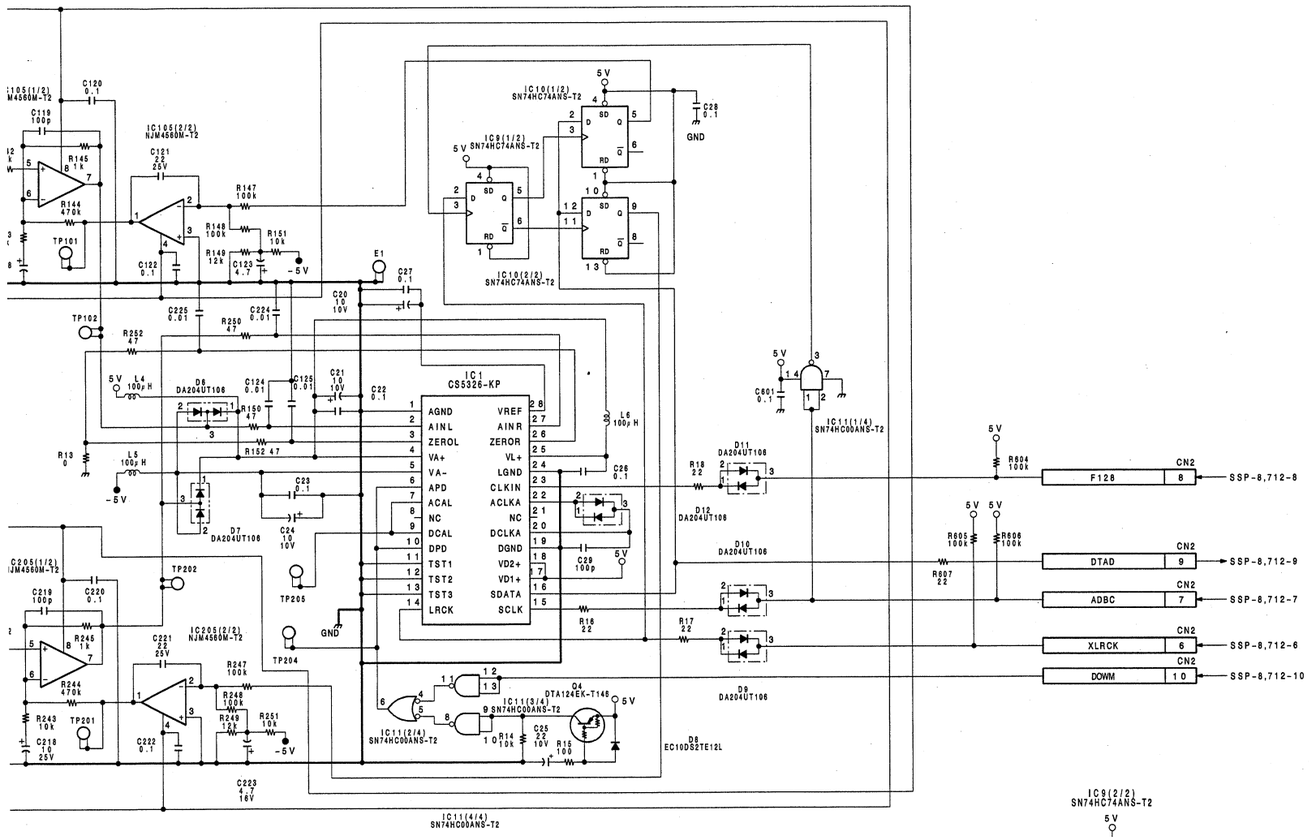

ADA-31 BOARD (1/2)

BOARD NO.1-650-073-11
PCM-E7700

ADA-31 BOARD (1/2)

Rec Audio,A/D Converter
PB Audio,D/A Converter

Serial No.
J ;10111 and higher
UC;20056 and higher
EK;50236 and higher

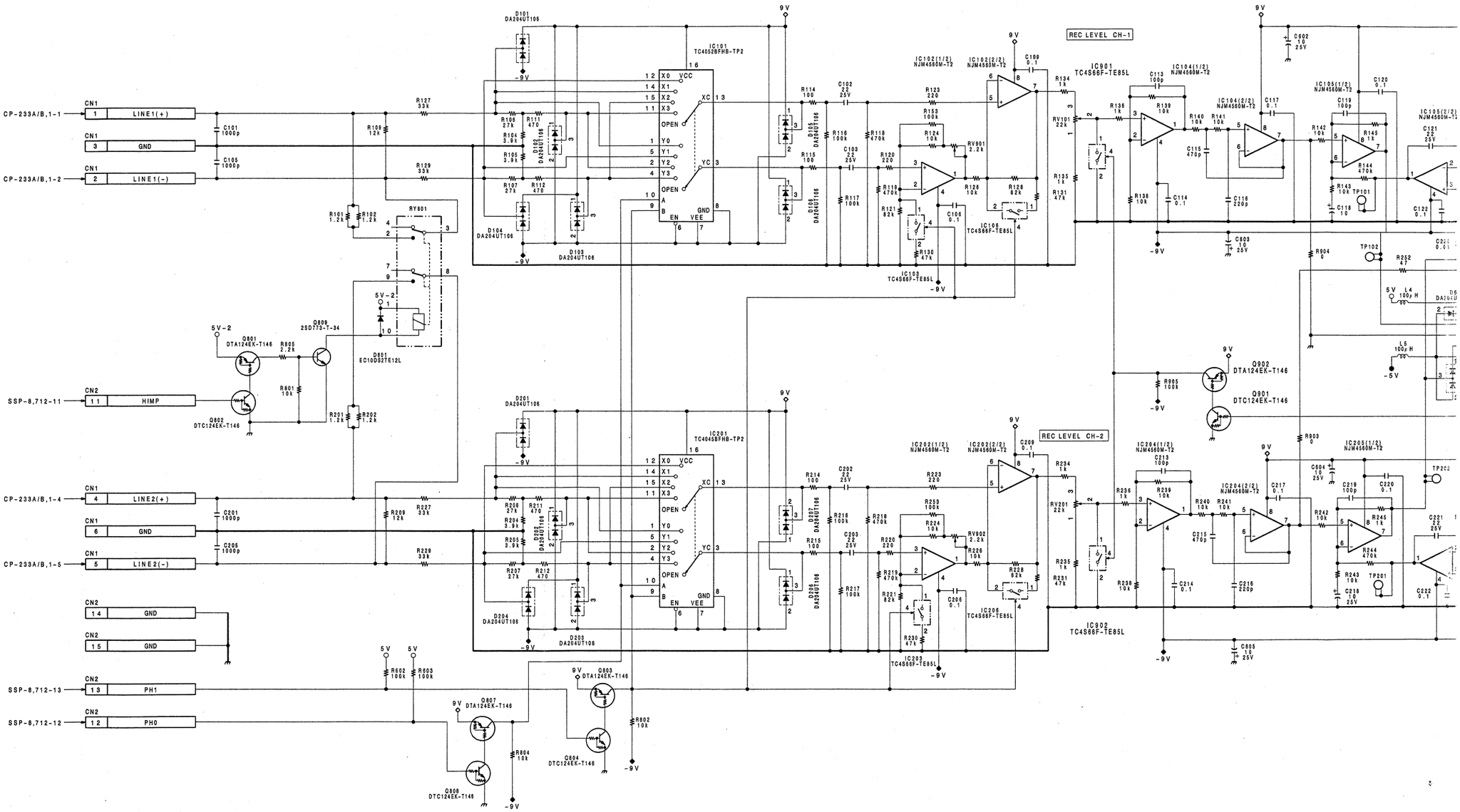

5-2(c)

A | B | C | D | E | F | G | H

ADA-31 BOARD (1/2)

Rec Audio,A/D Converter
PB Audio,D/A Converter

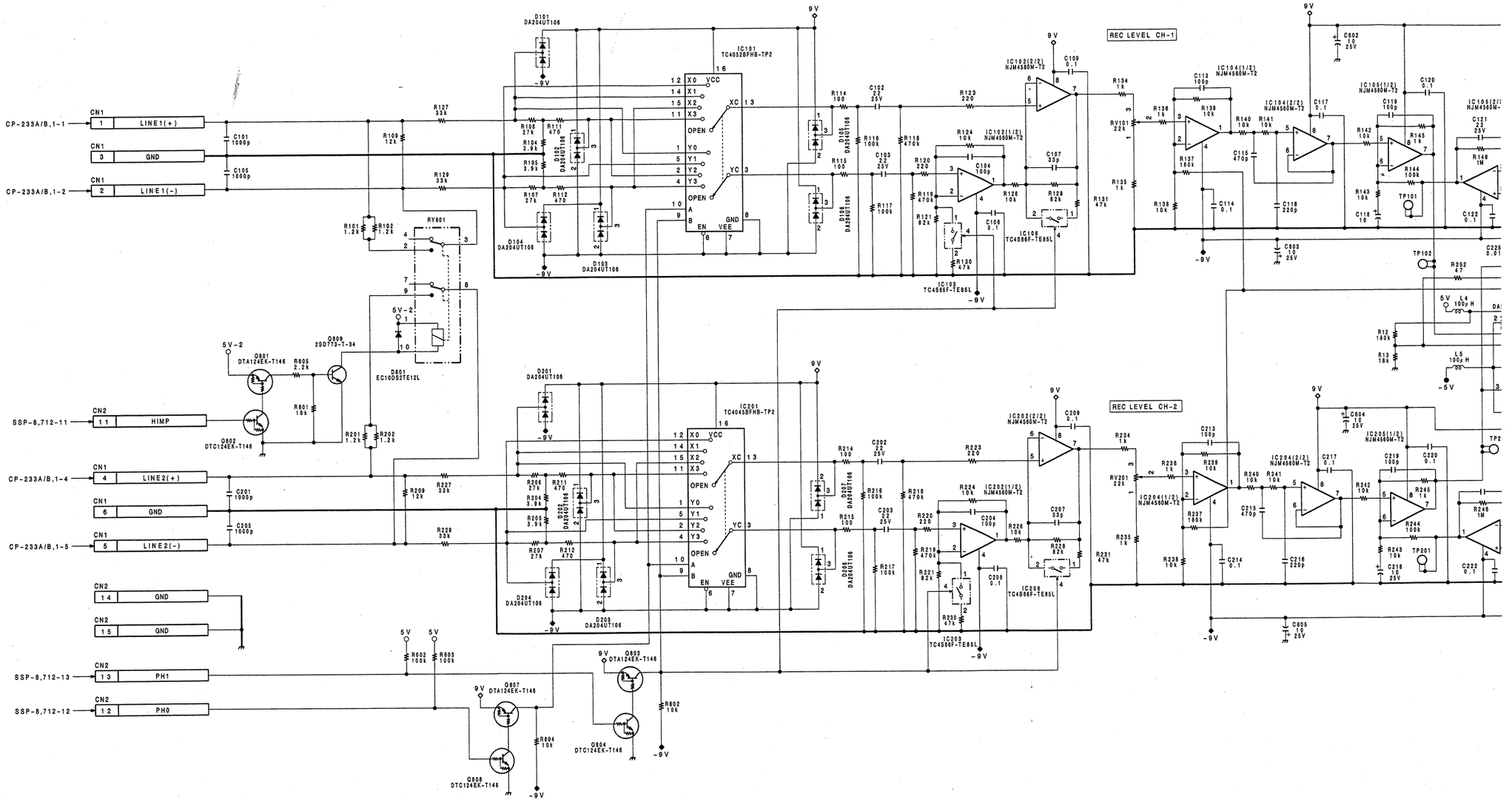

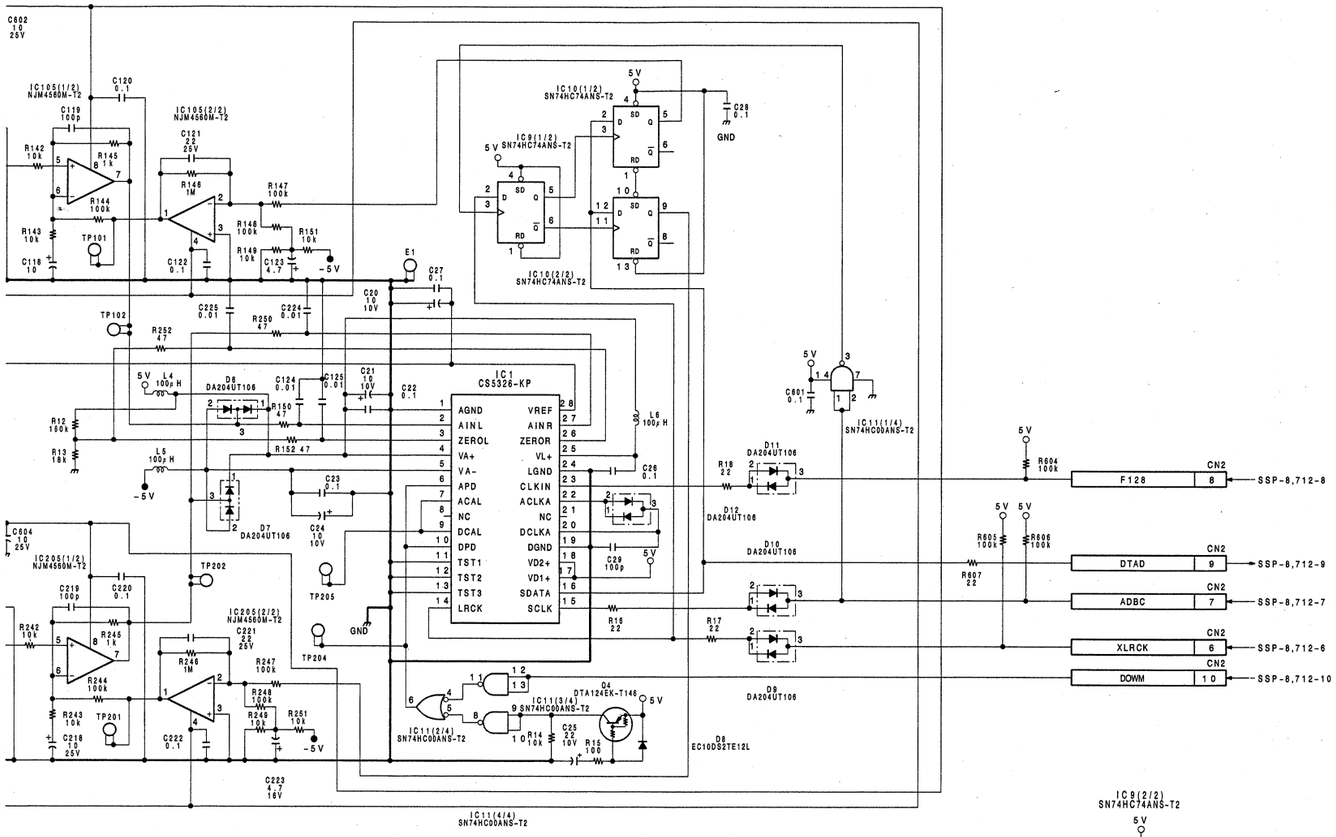

ADA-31 BOARD (1/2)

BOARD NO.1-650-073-11
PCM-E7700

I J K L M N O

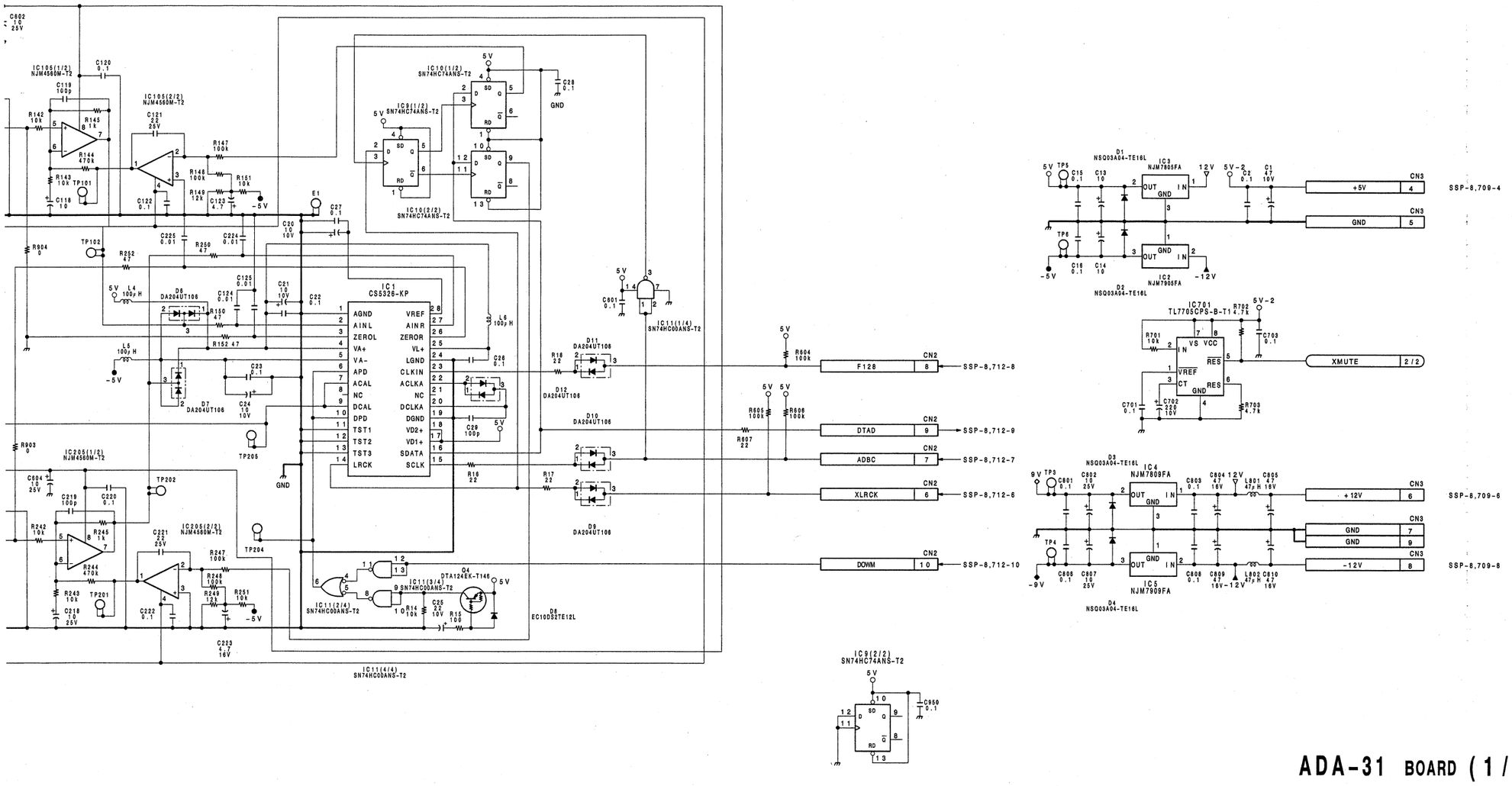

ADA-31 BOARD (1/2)

BOARD NO.1-650-073-12
PCM-E7700

ADA-31 BOARD (2/2)

Rec Audio,A/D Converter
PB Audio,D/A Converter

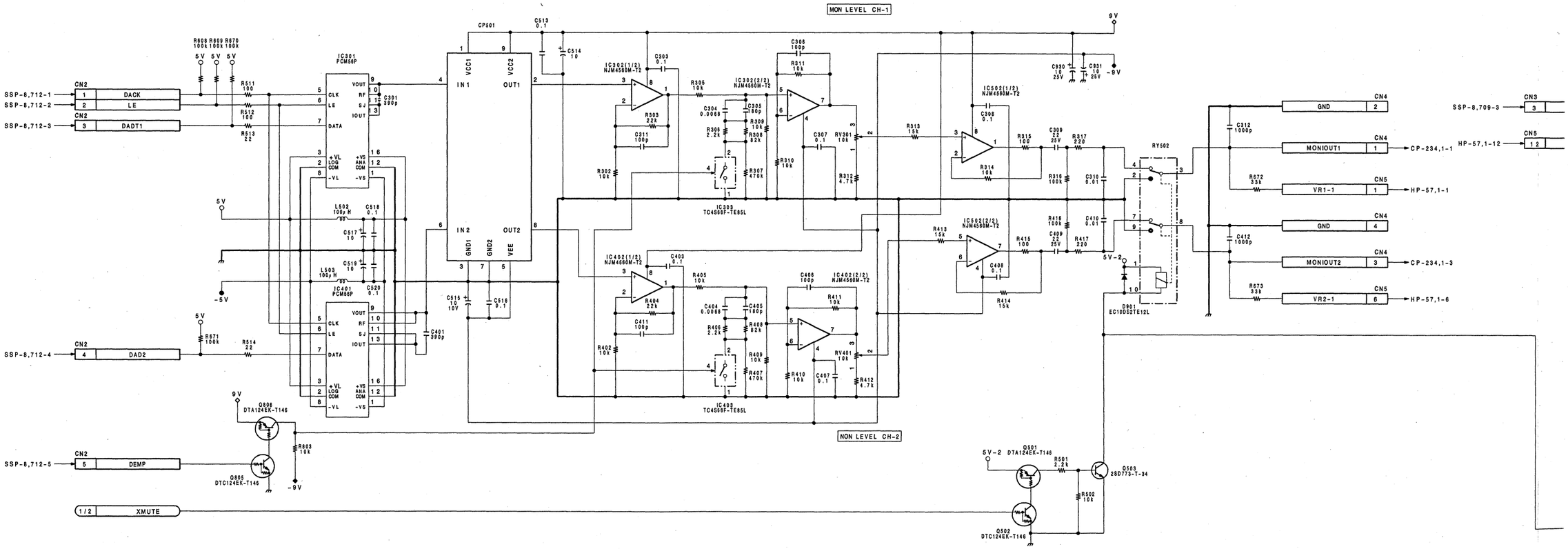

A | B | C | D | E | F | G | H

ADA-31(2/2)

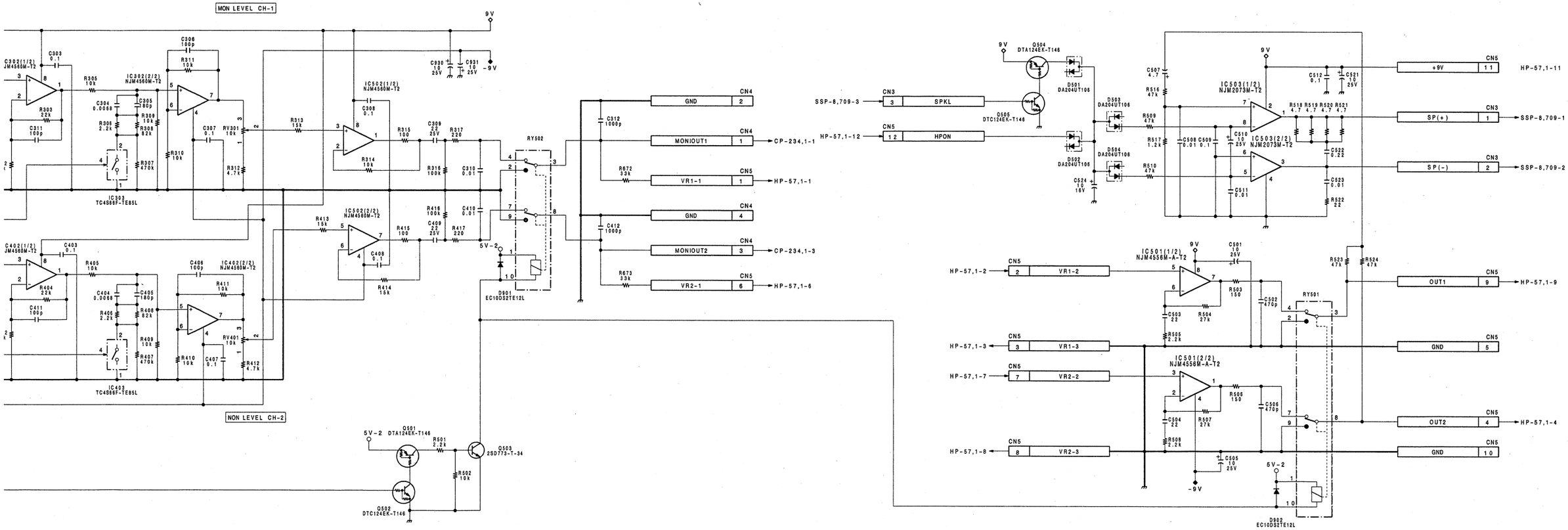

ADA-31 BOARD (2/2)

BOARD NO.1-650-073-11
PCM-E7700

5-3

ADA-31 BOARD (2/2)

Rec Audio,A/D Converter
PB Audio,D/A Converter

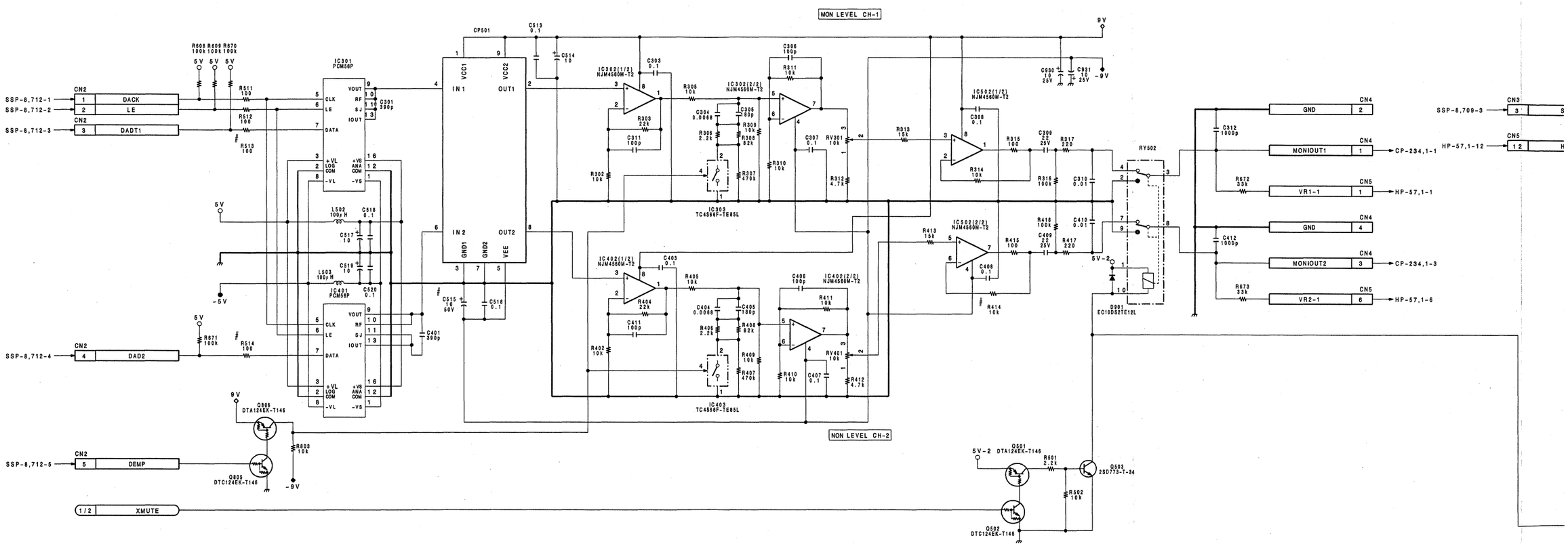

#;Changed Information

Applied Serial No.	Pa ch
J ;10111 and higher	C5
UC ;20056 and higher	R4
EK ;50236 and higher	R5

A | B | C | D | E | F | G | H

ADA-31(2/2)

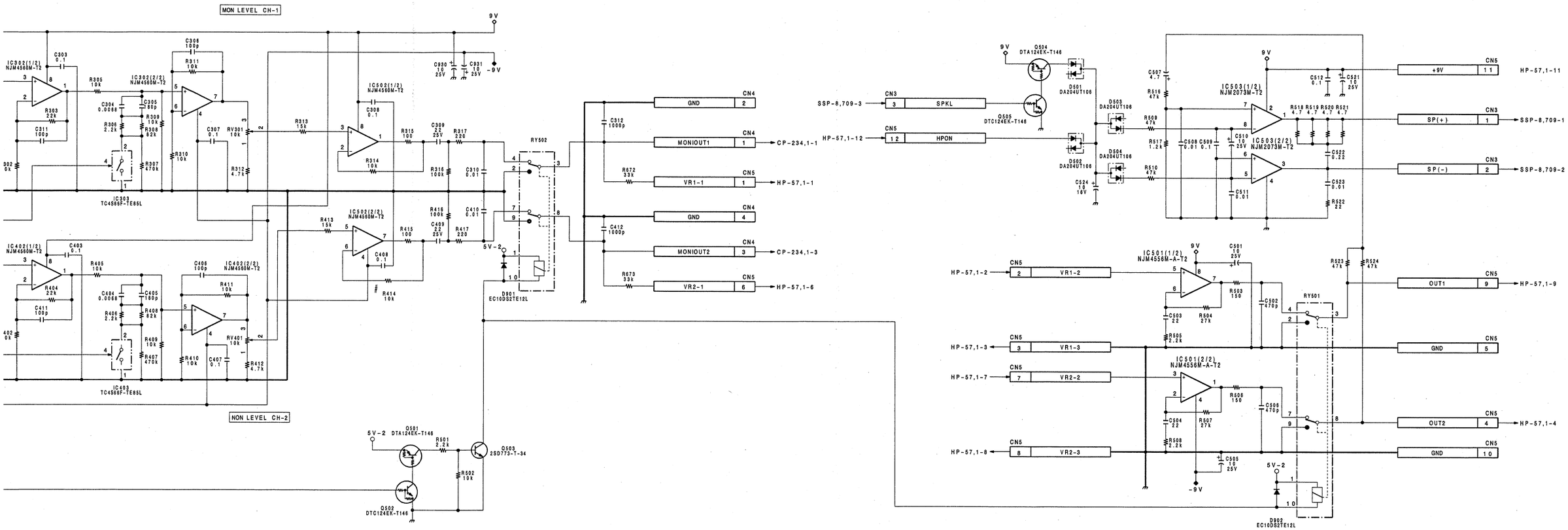

#:Changed Information

Applied Serial No.	Parts that have been changed.		
J ;10111 and higher	C515	10V	→ 50V
UC ;20056 and higher	R414	15K	→ 10K
EK ;50236 and higher	R513,514	22	→ 100

ADA-31 BOARD (2/2)

BOARD NO.1-650-073-11,12
PCM-E7700

5-3

SSP-8(1/8)

SSP-8 BOARD (1/8)
System Control,Signal Processor

V50
SYSTEM I/O
INTERFACE

CXD8830Q
PROGRAMABLE
ADDRESS DECODER

5-4

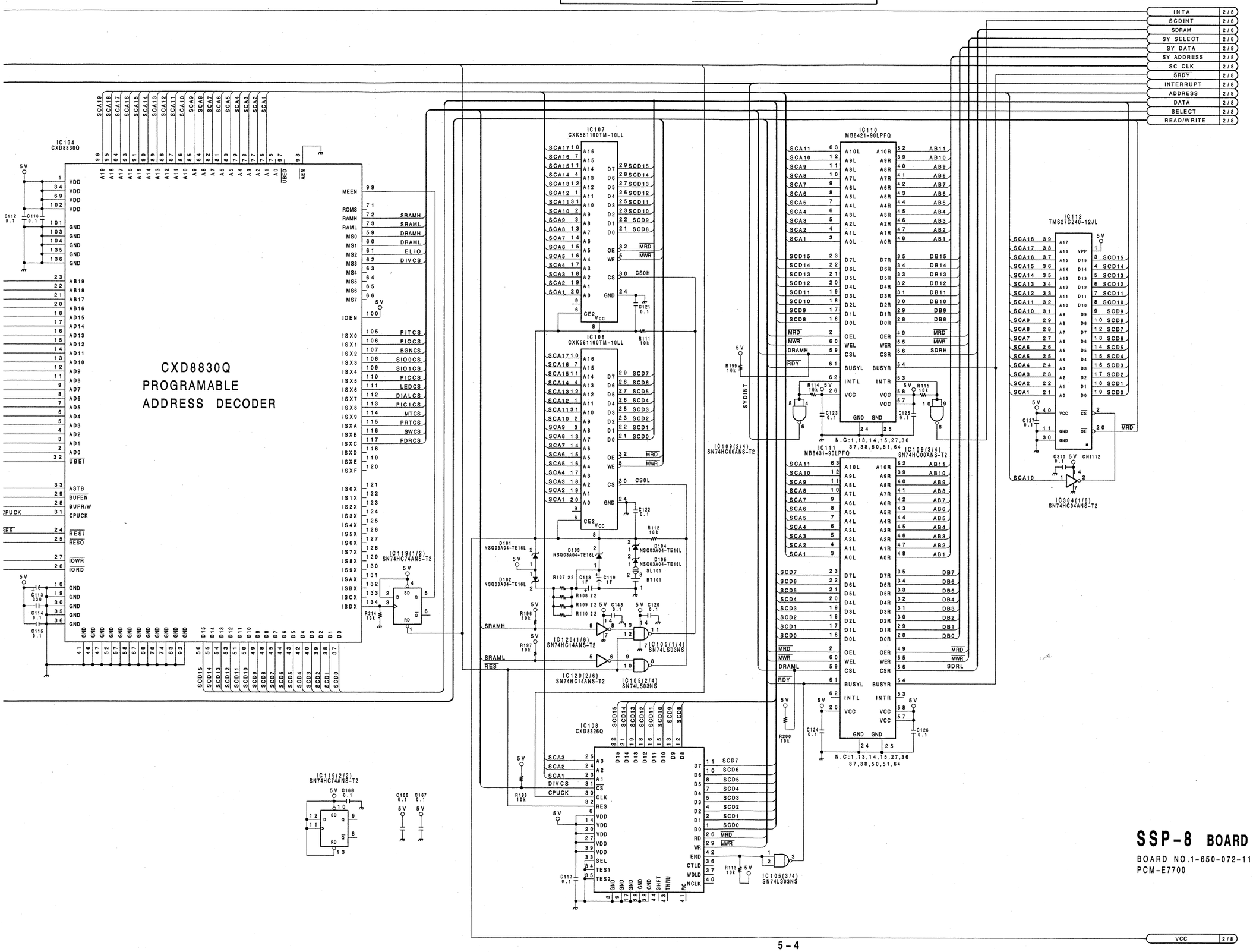

SSP-8 BOARD (1/8)

BOARD NO.1-650-072-11
PCM-E7700

E F G H I J K

SSP-8(1/8)

SSP-8(1

SSP-8 BOARD (1/8)
System Control,Signal Processor

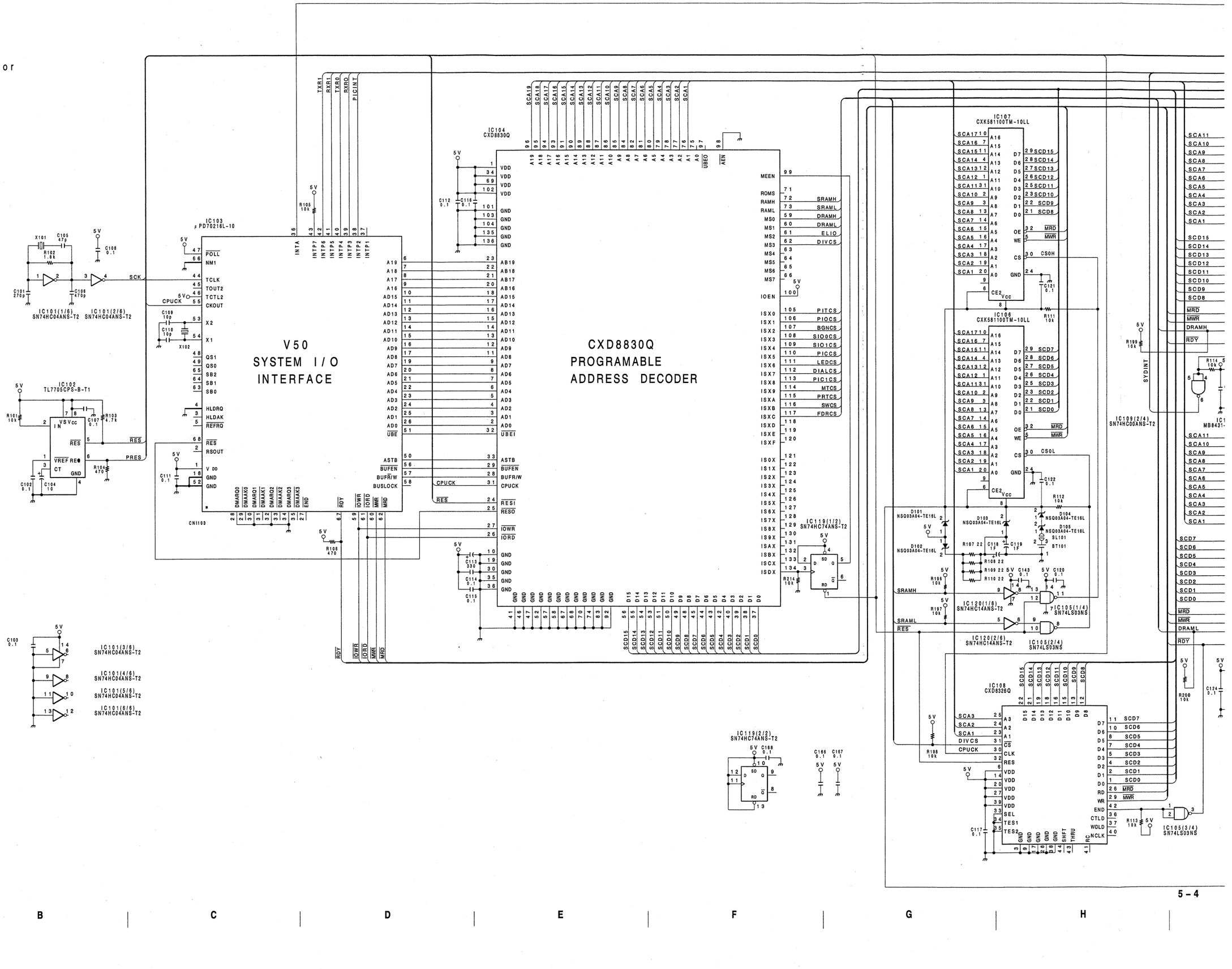

5-4

A | B | C | D | E | F | G | H

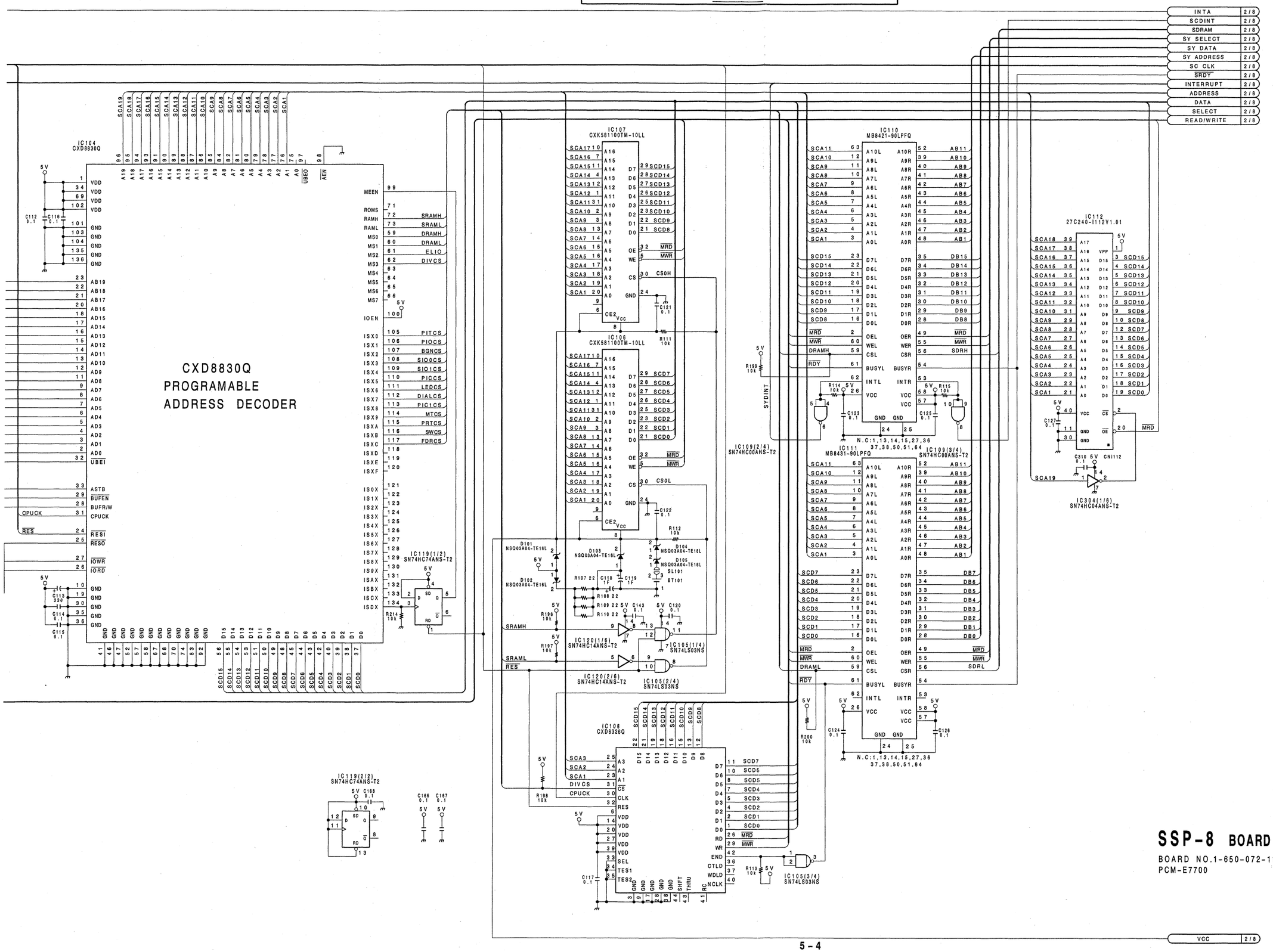

SSP-8 BOARD (1/8)

BOARD NO.1-650-072-11,12
PCM-E7700

SSP-8 BOARD (2/8)
System Control,Signal Processor

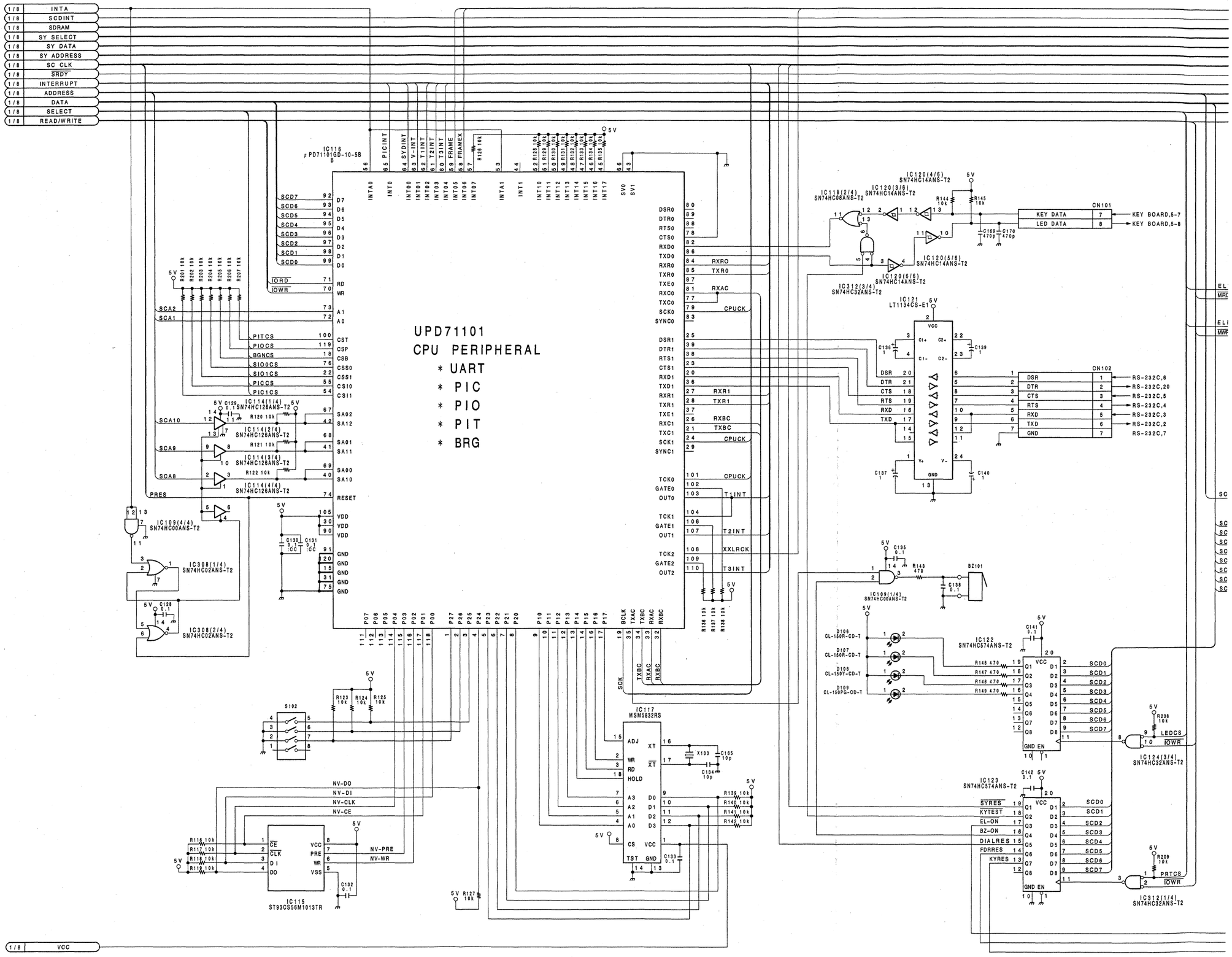

5-5

A | B | C | D | E | F | G | H

SP DATA 3/8
SCDINT 3/8
SDRAM 3/8
SY SELECT 3/8
SY DATA 3/8
SY ADDRESS 3/8
SC CLK 3/8
SRDY 3/8

V-INT
IORD
DIALCS
DIALRES

CN101
7 KEY BOARD,5-7
8 KEY BOARD,5-8

CN102
1 RS-232C,6
2 RS-232C,20
3 RS-232C,5
4 RS-232C,4
5 RS-232C,3
6 RS-232C,2
7 RS-232C,7

CP101 16MHZ
C144 0.1
VCC CLK GND

CP102
R176 390

IC125 μPD72020GC-8-3B6
IC126 CXD1102Q
EPO WP1 WP2
DREQ DACK
CLK CLR TEST
2CLK RAS DBIN VSYN HSYN BLK LPEN
CKX2 RAS DBIN VSYN HSYN BLK
AD17 AD16 AD15 AD14 AD13 AD12 AD11 AD10 AD9 AD8 AD7 AD6 AD5 AD4 AD3 AD2 AD1 AD0
DB7 DB6 DB5 DB4 DB3 DB2 DB1 DB0
DIN MA14 MA13 MA12 MA11 MA10 MA9 MA8 MA7 MA6 MA5 MA4 MA3 MA2 MA1 MA0
MD15 MD14 MD13 MD12 MD11 MD10 MD9 MD8 MD7 MD6 MD5 MD4 MD3 MD2 MD1 MD0
LD VD
VDC2 VDC1 VDC0
GND Vcc

IC124(1/4) SN74HC32ANS-T2
IC124(2/4) SN74HC32ANS-T2
IC124(3/4) SN74HC32ANS-T2
IC124(4/4) SN74HC32ANS-T2
ELIO MRD RD
ELIO MWR WR
R210 10k C145 0.1

IC127 CXK58257ATM-70LL
IC128 CXK58257ATM-70LL
D7 D6 D5 D4 D3 D2 D1 D0 A14 A13 A12 A11 A10 A9 A8 A7 A6 A5 A4 A3 A2 A1 A0
OE WE CS GND Vcc
C149 0.1 C148 0.1 C150 0.1

R154 10k R155 10k R156 10k R157 10k R158 10k R159 10k R160 10k R161 10k R162 10k R163 10k R164 10k R165 10k R166 10k R167 10k R168 10k R169 10k R170 10k R171 10k R172 10k R173 10k R174 10k R175 10k R177 10k R178 10k R179 10k R180 10k R181 10k R182 10k R183 10k R184 10k R185 10k R186 10k R187 10k R188 10k R189 10k R190 10k R191 10k R192 10k

C145 0.1 C146 0.1

N.C:1,7,13,14,26 27,33,39,40,52

IC133 MSM6388MS-K
SCD3 SCD2 SCD1 SCD0 IOWR IORD MTCS SCA2 SCA1
DT BCK LRCK DO RES VCC GND
MTDT ADBC XXLRCK RES
C161 0.1

IC134 SN74HC541ANS-T2
SCD7 SCD6 SCD5 SCD4 SCD3 SCD2 SCD1 SCD0
VCC GND G2 G1

SP(+) SP(-)
C171 470p C172 470p
CN101
SP(+) 11 KEY BOARD,5-11
SP(-) 12 KEY BOARD,5-12

CN104
ELSW 1 MICRO SW,1
ELGND 2 MICRO SW,2

IC131 μPD4702G
IC135 μPD4702G
IC136 μPD4702G
RES D7 D6 D5 D4 D3 D2 D1 D0 Cr Br A B OE STB
N.C:4,9,11

IC312(2/4) SN74HC32ANS-T2
SWCS
IC513(2/4) SN74HC32ANS-T2
FDRCS

CN101
DIAL A 3 KEY BOARD,5-3
DIAL B 4 KEY BOARD,5-4
BAL A 13 KEY BOARD,5-13
BAL B 14 KEY BOARD,5-14
LEVEL A 15 KEY BOARD,5-15
LEVEL B 16 KEY BOARD,5-16
GND 1
GND 2
GND 5
KYRES 6 KEY BOARD,5-6
VCC 9
VCC 10

IC105(4/4) SN74LS03NS

IC128 PALCE16V8Q-25JC
CKIN VIN HIN DIN CKO VO HO DOO D10 VCC OE GND

IC132 74F244SJ-T5L
VCC G1 G2 GND

R215 68 R216 68 R217 68 R218 68 R219 68

CN103
+12V 1 EL DISPLAY,1
+12V 2 EL DISPLAY,2
+5V 3 EL DISPLAY,3
+5V 4 EL DISPLAY,4
NC 5
NC 6
NC 10
CLK 13 EL DISPLAY,8
ELD1 16 EL DISPLAY,9
ELD0 15 EL DISPLAY,10
HSYNC 11 EL DISPLAY,11
VSYNC 9 EL DISPLAY,12
GND 7
GND 8
GND 12
GND 14

IC118(4/4) SN74HC08ANS-T2
IC118(1/4) SN74HC08ANS-T2
IC118(3/4) SN74HC08ANS-T2
C147 0.1

IC312(1/4) SN74HC32ANS-T2
LEDCS IOWR
PRTCS IOWR

SSP-8 BOARD (2/8)

BOARD NO.1-650-072-11
PCM-E7700

SSP-8 BOARD (2/8)
System Control,Signal Processor

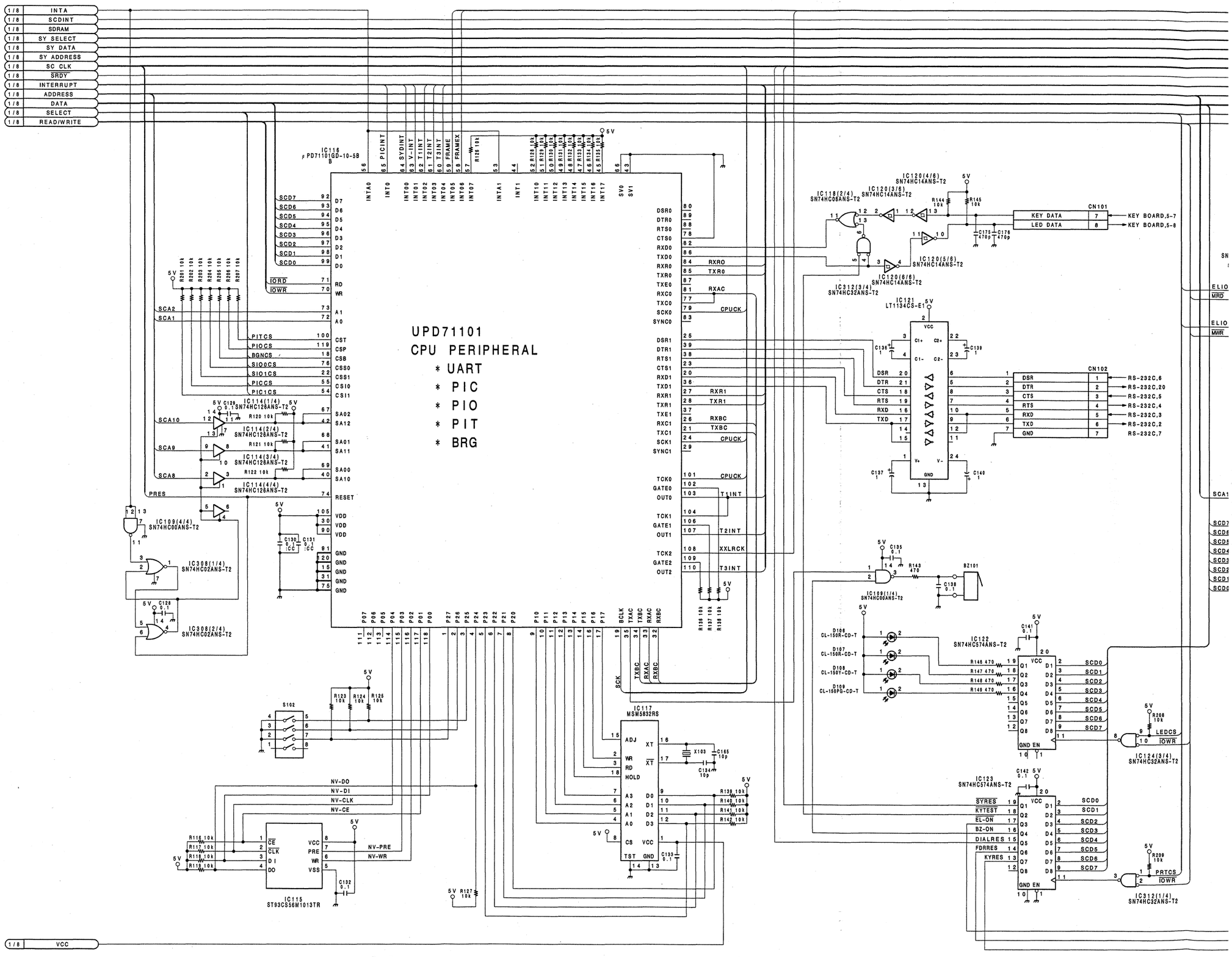

A | B | C | D | E | F | G | H

SP DATA	3/8
SCDINT	3/8
SDRAM	3/8
SY SELECT	3/8
SY DATA	3/8
SY ADDRESS	3/8
SC CLK	3/8
SRDY	3/8

CN101
7 KEY BOARD,5-7
8 KEY BOARD,5-8

CN102
1 RS-232C,6
2 RS-232C,20
3 RS-232C,5
4 RS-232C,4
5 RS-232C,3
6 RS-232C,2
7 RS-232C,7

CP101 16MHZ C144 0.1 VCC GND CLK

CP102 R176 390

IC125 μPD72020GC-8-3B6
IC126 CXD1102Q
EPO WP1 WP2

IC124(1/4) SN74HC32ANS-T2 DREQ DACK
IC124(2/4) SN74HC32ANS-T2 ELIO MRD RD MWR WR
IC124(3/4) SN74HC32ANS-T2 LEDCS IOWR
IC312(1/4) SN74HC32ANS-T2 PRTCS IOWR

IC118(4/4) SN74HC08ANS-T2
IC118(1/4) SN74HC08ANS-T2
IC118(3/4) SN74HC08ANS-T2

IC127 CXK58257ATM-70LL
IC128 CXK58257ATM-70LL

N.C:1,7,13,14,26 27,33,39,40,52

V-INT IORD DIALCS DIALRES

IC133 MSM6388MS-K
SCD3 SCD2 SCD1 SCD0 IOWR IORD MTCS SCA2 SCA1
MTDT ADBC XXLRCK RES

SP(+) SP(-) C177 470p C178 470p
CN101 SP(+) SP(-) KEY BOARD,5-11 KEY BOARD,5-12

IC134 SN74HC541ANS-T2
SCD7 SCD6 SCD5 SCD4 SCD3 SCD2 SCD1 SCD0

CN104 ELSW ELGND MICRO SW,1 MICRO SW,2

IC131 μPD4702G
IC312(2/4) SN74HC32ANS-T2 SWCS
IC513(2/4) SN74HC32ANS-T2 FDRCS
IC124(4/4) SN74HC32ANS-T2

CN101
DIAL A KEY BOARD,5-3
DIAL B KEY BOARD,5-4
BAL A KEY BOARD,5-13
BAL B KEY BOARD,5-14
LEVEL A KEY BOARD,5-15
LEVEL B KEY BOARD,5-16
GND GND GND KYRES KEY BOARD,5-6 VCC VCC

IC135 μPD4702G
IC136 μPD4702G
N.C:4,9,11

IC105(4/4) SN74LS03NS

IC129 PALCE16V8Q-25JC
IC132 74F244SJ-T5L

CN103
+12V +12V +5V +5V NC NC NC CLK ELD1 ELD0 HSYNC VSYNC GND GND GND GND
EL DISPLAY,1 EL DISPLAY,2 EL DISPLAY,3 EL DISPLAY,4 EL DISPLAY,8 EL DISPLAY,9 EL DISPLAY,10 EL DISPLAY,11 EL DISPLAY,12

SSP-8 BOARD (2/8)

BOARD NO.1-650-072-11,12
PCM-E7700

1 2 3 4 5

I J K L M N O

SSP-8 BOARD (3/8)
System Control,Signal Processor

2/8 SP DATA
2/8 SCDINT
2/8 SDRAM
2/8 SY SELECT
2/8 SY DATA
2/8 SY ADDRESS
2/8 SC CLK
2/8 SRDY

SYMNP

IC303(1/2) SN74HC139ANS-T2
IC303(2/2) SN74HC139ANS-T2
AB14
AB15
SDRH
PDRH
SDRL
PDRL
C327 0.1

IC301 μPD70216L-10

V50
SYSTEM
CONTROLLER
PLAYER MD
PLAYER SCC
SOUND MEMORY
RECORDER CONTROLLER
SP PERIPHERAL

IC302 CXD8830Q

CXD8830Q
PROGRAMABLE
ADDRESS DECODER

IC305 CXK58257ATM-70LL
IC306 CXK58257ATM-70LL
IC307 TMS27C240-12JL
IC310 μPD71059GB-10-3B 4
IC311 μPD71054GB-10-3B 4

IC309(1/4) SN74HC126ANS-T2
IC309(2/4) SN74HC126ANS-T2
IC309(3/4) SN74HC126ANS-T2
IC309(4/4) SN74HC126ANS-T2
IC308(3/4) SN74HC02ANS-T2
IC304(4/6) SN74HC04ANS-T2
IC308(4/4) SN74HC02ANS-T2
IC319(1/2) SN74HC74ANS-T2
IC503(1/2) SN74HC21ANS-T2
IC304(2/6) SN74HC04ANS-T2

CN1301
CN1307

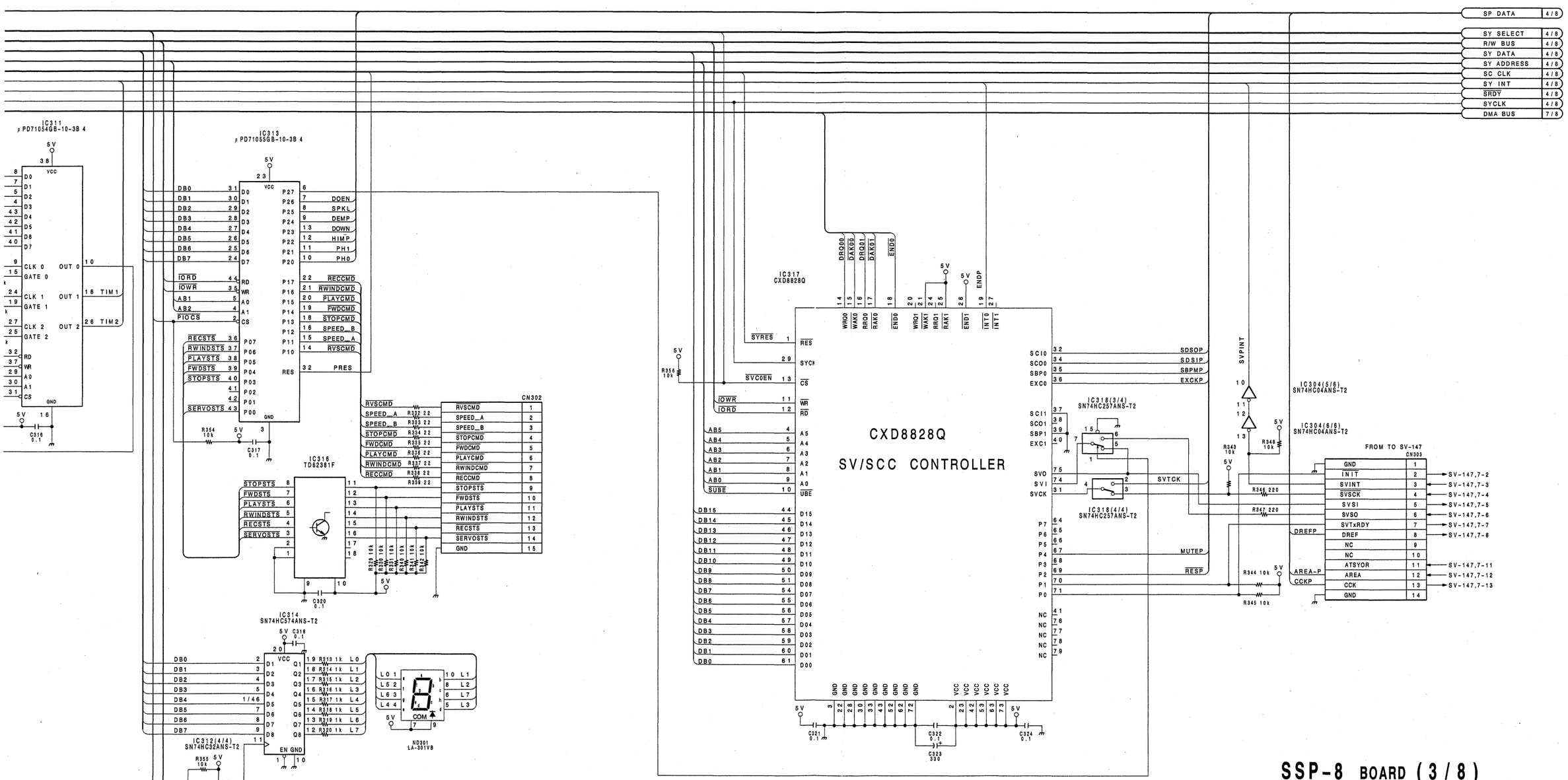

SSP-8 BOARD (3/8)

BOARD NO.1-650-072-11
PCM-E7700

SSP-8 BOARD (3/8)
System Control,Signal Processor

2/8 SP DATA
2/8 SCDINT
2/8 SDRAM
2/8 SY SELECT
2/8 SY DATA
2/8 SY ADDRESS
2/8 SC CLK
2/8 SRDY

IC303(1/2) SN74HC139ANS-T2
IC303(2/2) SN74HC139ANS-T2
AB14
AB15
SDRH
PDRH
SDRL
PDRL
C327 0.1

IC301 μPD70216L-10
V50 SYSTEM CONTROLLER
PLAYER MD
PLAYER SCC
SOUND MEMORY
RECORDER CONTROLLER
SP PERIPHERAL

IC302 CXD8830Q
CXD8830Q PROGRAMABLE ADDRESS DECODER

IC305 CXK58257ATM-70LL
IC306 CXK58257ATM-70LL
IC307 27C240-P307V1.00

IC310 μPD71059GB-10-3B 4
IC311 μPD71054GB-10-3B 4

IC309(1/4) SN74HC126ANS-T2
IC309(2/4) SN74HC126ANS-T2
IC309(3/4) SN74HC126ANS-T2
IC309(4/4) SN74HC126ANS-T2
IC308(3/4) SN74HC02ANS-T2
IC308(4/4) SN74HC02ANS-T2
IC304(4/6) SN74HC04ANS-T2
IC304(2/6) SN74HC04ANS-T2
IC319(1/2) SN74HC74ANS-T2
IC503(1/2) SN74HC21ANS-T2

CN1301
CN1307

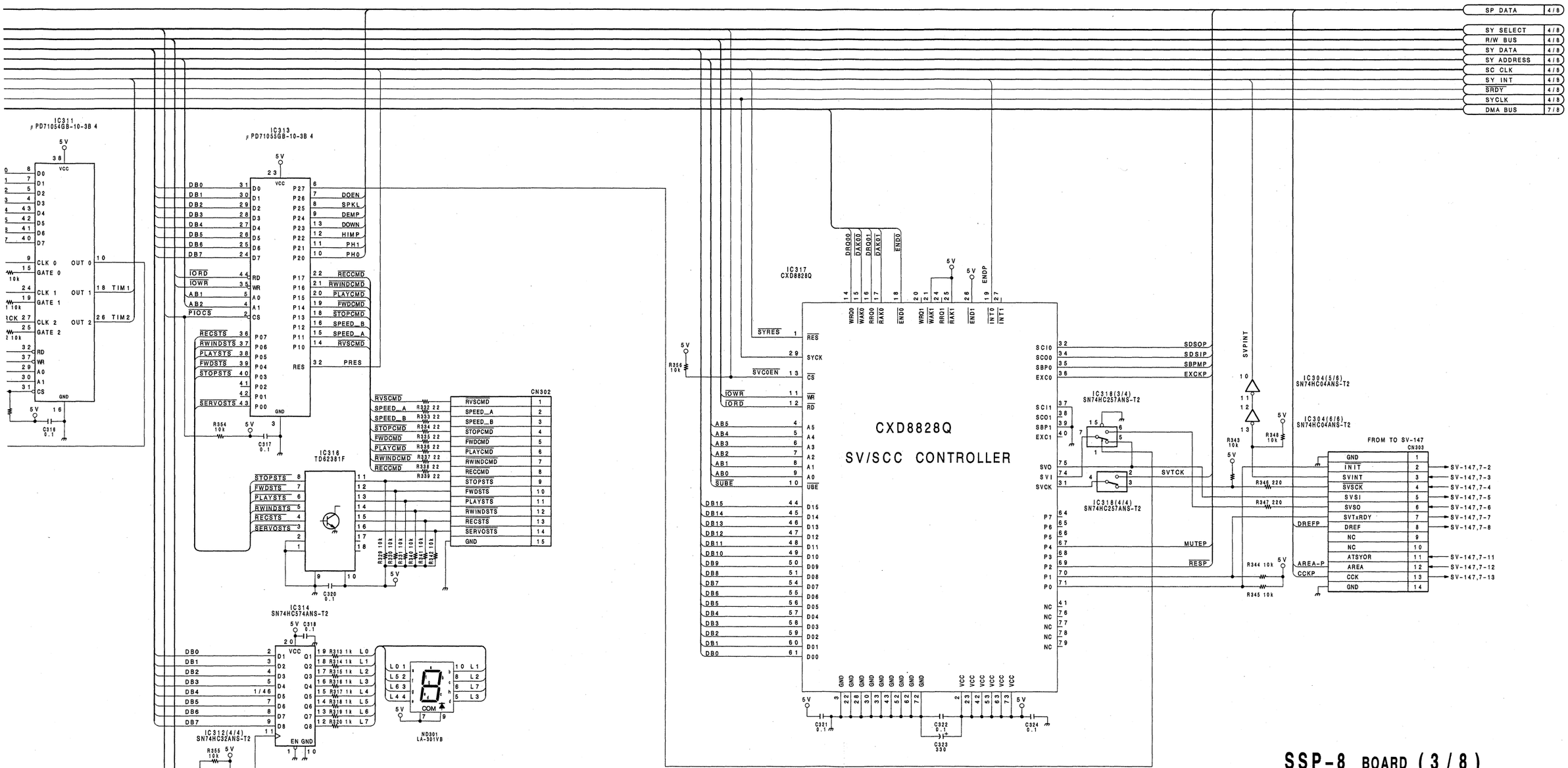

SSP-8 BOARD (3/8)

BOARD NO.1-650-072-11,12
PCM-E7700

SSP-8 BOARD (4/8)
System Control,Signal Processor

3/8 SP DATA

3/8 SY SELECT
3/8 R/W BUS
3/8 SY DATA
3/8 SY ADDRESS
3/8 SC CLK
3/8 SY INT
3/8 SRDY
3/8 SYCLK

SYMNRT

IC501
μPD70216L-10

V50
RECORDER
CONTROLLER

IC502
CXD8830Q

CXD8830Q
PROGRAMABLE
ADDRESS DECODER

IC505
MB8421-90LPFQ

IC506
MB8431-90LPFQ

IC507
CXK58257ATM-70LL

IC508
CXK58257ATM-70LL

IC509
TMS27C210A-12JL

IC504(1/6) SN74HC04ANS-T2
IC504(2/6) SN74HC04ANS-T2
IC304(3/6) SN74HC04ANS-T2
IC319(2/2) SN74HC74ANS-T2
IC503(2/2) SN74HC21ANS-T2

N.C:1,13,14,15,27,36
37,38,50,51,64

5-7

A | B | C | D | E | F | G | H

SSP-8 BOARD (4/8)

BOARD NO.1-650-072-11
PCM-E7700

SSP-8 BOARD (4/8)
System Control,Signal Processor

3/8 SP DATA
3/8 SY SELECT
3/8 R/W BUS
3/8 SY DATA
3/8 SY ADDRESS
3/8 SC CLK
3/8 SY INT
3/8 SRDY
3/8 SYCLK

SYMNRT
PICINT
SYRINT
SYPINT

IC501
μPD70216L-10

V50
RECORDER
CONTROLLER

IC502
CXD8830Q

CXD8830Q
PROGRAMABLE
ADDRESS DECODER

IC505
MB8421-90LPFQ

IC506
MB8431-90LPFQ

IC507
CXK58257ATM-70LL

IC508
CXK58257ATM-70LL

IC509
27C210-R509V1.00

IC319(2/2)
SN74HC74ANS-T2

IC503(2/2)
SN74HC21ANS-T2

IC504(1/6)
SN74HC04ANS-T2

IC504(2/6)
SN74HC04ANS-T2

IC304(3/6)
SN74HC04ANS-T2

CN1501
CN1509

N.C:1,13,14,15,27,36
37,38,50,51,64

5-7

A B C D E F G H

SSP-8 BOARD (4/8)

BOARD NO.1-650-072-11,12
PCM-E7700

SSP-8 BOARD (5/8)
System Control,Signal Processor

4/8 SP DATA
4/8 SY SELECT
4/8 R/W BUS
4/8 SY DATA
4/8 SY ADDRESS
4/8 SC CLK
4/8 SRDY
4/8 SYCLK

CN706: +5V 1 FAN,1 / NC 2 / GND 3
L701 100μH, C705 330 6.3V

SPKL, SP(-), SP(+)

CN701: SW REG,53-1 +5V 1 / GND 2 / SW REG,53-3 +12V 3 / SW REG,53-4 -12V 4
CN702: SW REG,52-1 +5V 1 / GND 2 / SW REG,52-3 +12V 3 / SW REG,52-4 -12V 4
CN703: SW REG,51-1 +5V 1 / GND 2 / SW REG,51-3 +12V 3 / SW REG,51-4 -12V 4
C767 0.1, C768 0.1, C769 0.1

+5V TP701, C702 330 6.3V
+12V TP702, C704 330 16V
-12V TP703, C703 330 16V

CN707: +5V 1 SV-147,11-1 / +5V 2 SV-147,11-2 / GND 3 / GND 4 / +12V 5 SV-147,11-5 / GND 6
CN708: +5V 1 SV-147,11-1 / +5V 2 SV-147,11-2 / GND 3 / GND 4 / +12V 5 SV-147,11-5 / GND 6
L705 47μH, C765 0.01, C766 330 6.3V

CN709: SP(+) 1 ADA-31,3-1 / SP(-) 2 ADA-31,3-2 / SPKL 3 ADA-31,3-3 / +5V 4 ADA-31,3-4 / GND 5 / +12V 6 ADA-31,3-6 / GND 7 / -12V 8 ADA-31,3-8 / GND 9

IC703 AM26LS31CNS
DOEN
C718 0.1
IC705(1/6) SN74HC04ANS-T2

IC704 AM26LS32ACNS
C720 0.1

CN704: CP-233A/B,5-1 DI(+) 1 / CP-233A/B,5-2 DI(-) 2 / GND 3
C706 0.22, R701 220, R702 220, T701
R703 4.7, R704 4.7, R706 100, R705 100, C711 47p, C712 47p
D701 1SS119, D702 1SS119, D703 1SS119, D704 1SS119

12V
IC701 NJM78L05A-T3
C701 50V, C707 50V

L702 100μH, L703 100μH, L704 100μH
C706 10 16V, C710 0.1
R707 4.7k, C713 1, C714 10 16V, C716 0.1
R708 22k, R709 22k, R710 1k, C715 1
C717 22p, C719 0.1, C721 330 6.3V
IC702 CX23065A
IC706 SN74LS624NS-T2

IC707 CXK58257ATM-70LL
D7P D6P D5P D4P D3P D2P D1P D0P
A14 A13 A12 A11 A10 A9 A8 A7 A6 A5 A4 A3 A2 A1 A0
D7 D6 D5 D4 D3 D2 D1 D0
OE WE CS GND Vcc
C727 0.1

D706 1SS119, D705 1SS119
C722 0.1
FB701
CP701 49.152M

IC708 CXD2605R
D0P D1P D2P D3P D4P D5P D6P D7P MNTGP
A09 A08 A07 A06 A05 A04 A03 A02 A01 A00 D0 D1 VSS D2 D3 D4 D5 D6 D7 MNTG ERRF ERRI ADDN ADDI DADO
VDD A10 A11 A12 A13 A14 XWE XOE XEAN TST1 XT1O XT1I VSS XRST CLKO MINT ATSY MCLK DREF SBPM EXCK SDSI SDSO SBSY RFPL
CCLK MUTE MUTM UNLK RFCT SYMN TST5 PLCK TST2 RFDT XCS SWP VSS PIPC REPB REDT TST4 PDO SELC MUTA PLCO PLVR PLRF MSSL RX
DADT ADDT BCK XBCK WCK LRCK LRO1 LRO2 LRO3 FSEN XT3I XT3O VSS XT2I XT2O DALF ADLF F512 F256 F128 EXSN EXSY TST6 TX VDD
CXD2605R
DAT SIGNAL PROCESSOR
PLAYER
R712 100, R713 2.2
RESP, SYCKP, CCKP, DREFP, SBPMP, EXCKP, SDSIP, SDSOP, LSBSYP, MUTEP, MUTMP
C728 330, C730 0.1
C723 0.1, CP702 37.632M

CN710: RF-53,2-1 REDT-A 1 / RF-53,2-2 SWP-A 2 / RF-53,2-3 PBDT-A 3 / GND 4 / RF-53,2-5 REDT-D 5 / RF-53,2-6 REPBOR 6 / RF-53,2-7 PIPCOR 7 / RF-53,2-8 SWP-D 8 / RF-53,2-9 PBDT-D 9 / GND 10
IC709 TC7SU04F-TE85L
R714 1M, C726 0.1
IC732 TC7S00F-TE85L
IC718(5/6) SN74HC04ANS-T2
R715 10k
IC710(4/8) SN74HC541AN
IC710(5/8) SN74HC541AN
IC710(6/8) SN74HC541AN
IC710(7/8) SN74HC541AN
IC710(8/8) SN74HC541AN
C729 0.1

A B C D E F G H

SP DATA 6/8
SY SELECT 6/8
R/W BUS 6/8
SY DATA 6/8
SY ADDRESS 6/8
SC CLK 6/8
SRDT 6/8
SYCLK 6/8

IC708 CXD2605R
IC711 CXK58257ATM-70LL
IC712 CXD2605R
IC714 CXK58257ATM-70LL
IC715 CXD2605R

CXD2605R
DAT SIGNAL PROCESSOR
RECORDER/L

CXD2605R
DAT SIGNAL PROCESSOR
RECORDER/T

CESSOR

F1024
TESTDO
22.5792M
X701
C721 12p
C732 12p
R717 68
F256
F128
EXSYP
AREA-P
SYMNP
R715 10k

D7RL D6RL D5RL D4RL D3RL D2RL D1RL D0RL
D0RL D1RL D2RL D3RL D4RL D5RL D6RL D7RL MNTGRL
RESRL SYCKRL ATSYRL CCKR R718 22 DREFR SBPMRL EXCKRL SDSIRL SDSORL LSBSYRL
MUTERL MUTMRL
C735 0.1
C733 330 6.3V C734 0.1
C736 330 6.3V C737 0.1
R722 10k
MUTARL REPBRL PIPCRL SWPRL AREA-R REPBOR PIPCOR XAREA

D7RT D6RT D5RT D4RT D3RT D2RT D1RT D0RT
D0RT D1RT D2RT D3RT D4RT D5RT D6RT D7RT MNTGRT
RESRT SYCKRT ATSYRT SBPMRT EXCKRT SDSIRT SDSORT LSBSYRT
MUTERT MUTMRT XAREA
C740 0.1
C738 330 6.3V C739 0.1
C742 330 6.3V C743 0.1
R724 10k
MUTART REPBRT PIPCRT SWPRT SYMNRT AREA-R

IC710(1/8) SN74HC541ANS-T2
IC710(2/8) SN74HC541ANS-T2
IC710(3/8) SN74HC541ANS-T2
IC710(4/8) SN74HC541ANS-T2
IC710(5/8) SN74HC541ANS-T2
IC710(6/8) SN74HC541ANS-T2
IC710(7/8) SN74HC541ANS-T2
IC710(8/8) SN74HC541ANS-T2
C729 0.1
R719 68
R720 68
R721 1M
IC713 TC7SU04F-TE85L
IC733 TC7S00F-TE85L
IC716 TC7SU04F-TE85L
IC734 TC7S00F-TE85L
IC718(6/6) SN74HC04ANS-T2
C744 0.1

CN711

1	REDT-A
2	SWP-A
3	PBDT-A
4	GND
5	REDT-D
6	REPBOR
7	PIPCOR
8	SWP-D
9	PBDT-D
10	GND

RF-53,2-1 RF-53,2-2 RF-53,2-3 RF-53,2-5 RF-53,2-6 RF-53,2-7 RF-53,2-8 RF-53,2-9

SSP-8 BOARD (5/8)

BOARD NO.1-650-072-11
PCM-E7700

I J K L M N O

SSP-8 BOARD (5/8)
System Control,Signal Processor

Serial No.J ;10001 to 10110
UC ;20001 to 20055
EK ;50001 to 50235

4/8 SP DATA
4/8 SY SELECT
4/8 R/W BUS
4/8 SY DATA
4/8 SY ADDRESS
4/8 SC CLK
4/8 SRDY
4/8 SYCLK

CN706: +5V 1 FAN,1 / NC 2 / GND 3
L701 100μH
C705 330 6.3V
C770 0.1
+5V TP701

CN701: SW REG,53-1 +5V 1 / SW REG,53-3 GND 2 / SW REG,53-4 +12V 3 / -12V 4
CN702: SW REG,52-1 +5V 1 / SW REG,52-3 GND 2 / SW REG,52-4 +12V 3 / -12V 4
CN703: SW REG,51-1 +5V 1 / SW REG,51-3 GND 2 / SW REG,51-4 +12V 3 / -12V 4
C767 0.1, C768 0.1, C769 0.1
C702 330 6.3V
C704 330 16V
C703 330 16V
+12V TP702
-12V TP703
12V
5V

CN707: +5V 1 SV-147,11-1 / +5V 2 SV-147,11-2 / GND 3 / GND 4 / +12V 5 SV-147,11-5 / GND 6
CN708: +5V 1 SV-147,11-1 / +5V 2 SV-147,11-2 / GND 3 / GND 4 / +12V 5 SV-147,11-5 / GND 6
L705 47μH
C765 0.01
C766 330 6.3V

CN709: SP(+) 1 ADA-31,3-1 / SP(-) 2 ADA-31,3-2 / SPKL 3 ADA-31,3-3 / +5V 4 ADA-31,3-4 / GND 5 / +12V 6 ADA-31,3-6 / GND 7 / -12V 8 ADA-31,3-8 / GND 9
SPKL, SP(-), SP(+)

IC703 AM26LS31CNS
DOEN
IC705(1/8) SN74HC04ANS-T2
C718 0.1

IC704 AM26LS32ACNS
D701 1SS119, D702 1SS119, D703 1SS119, D704 1SS119
R703 47, R704 47, R705 100, R706 100
C708 0.22, C709 0.22, R701 220, R702 220, T701
C711 47p, C712 47p
C720 0.1

CN704: CP-233A/B,5-1 DI(+) 1 / CP-233A/B,5-2 DI(-) 2 / GND 3

IC701 NJM78L05A-T3
C701 1 50V, C707 1 50V

IC702 CX23065A
L702 100μH, L703 100μH, L704 100μH
C706 10 16V, C710 0.1
R707 4.7k, R708 22k, R709 22k, R710 1k
C713 1, C714 10 16V, C715 1, C716 0.1, C717 22p
C719 0.1, C721 330 6.3V
IC706 SN74LS624NS-T2

CN710: RF-53,2-1 REDT-A 1 / RF-53,2-2 SWP-A 2 / RF-53,2-3 PBDT-A 3 / GND 4 / RF-53,2-5 REDT-D 5 / RF-53,2-6 REPBOR 6 / RF-53,2-7 PIPCOR 7 / RF-53,2-8 SWP-D 8 / RF-53,2-9 PBDT-D 9 / GND 10
IC709 TC7SU04F-TE85L
R714 1M, C726 0.1

D706 1SS119, D705 1SS119
C722 0.1, FB701, CP701 49.152M
C723 0.1, CP702 37.632M

IC707 CXK58257ATM-70LL
C727 0.1

IC708 CXD2605R
C724 330 6.3V, C725 0.1
R712 100, R713 22
RESP, SYCKP, CCKP, DREFP, SBPMP, EXCKP, SDSIP, SDSOP, LSBSYP, MUTEP, MUTMP
R715 10k
C728 330, C730 0.1

CXD2605R
DAT SIGNAL PROCESSOR
PLAYER

IC1(1/2) SN74HC74ANS, IC1(2/2) SN74HC74ANS, IC2(4/4) SN74HC00ANS
IC2(1/4) SN74HC00ANS, IC2(3/4) SN74HC00ANS, IC2(2/4) SN74HC00ANS
IC718(5/6) SN74HC04ANS-T2
* ;DUS-757 BOARD (1-652-478-11)

IC710 SN74HC54 ×5
C729 0.1

5-8(a)

SP DATA 6/8
SY SELECT 6/8
R/W BUS 6/8
SY DATA 6/8
SY ADDRESS 6/8
SC CLK 6/8
SRDT 6/8
SYCLK 6/8

IC708 CXD2605R

IC711 CXK58257ATM-70LL

IC712 CXD2605R

IC714 CXK58257ATM-70LL

IC715 CXD2605R

CXD2605R
DAT SIGNAL PROCESSOR
RECORDER/L

CXD2605R
DAT SIGNAL PROCESSOR
RECORDER/T

22.5792M

F1024
TESTDO
DADTP
ADDTP
BCK
XBCK
WCK
LRCK
F256
F128
EXSYP
AREA-P
SYMNP

DADTRL
ADDTRL
BCK
LRCK
F128
EXSYRL
MUTARL
REPBRL
PIPCRL
SWPRL
AREA-R

DADTRT
ADDTRT
BCK
LRCK
F128
EXSYRT
MUTART
REPBRT
PIPCRT
SWPRT
SYMNRT

RESRL
SYCKRL
ATSYRL
CCKR
DREFR
SBPMRL
EXCKRL
SDSIRL
SDSORL
LSBSYRL
MUTERL
MUTMRL

RESRT
SYCKRT
ATSYRT
SBPMRT
EXCKRT
SDSIRT
SDSORT
LSBSYRT
MUTERT
MUTMRT
XAREA

REPBOR
PIPCOR
XAREA

IC710(1/8) SN74HC541ANS-T2
IC710(2/8) SN74HC541ANS-T2
IC710(3/8) SN74HC541ANS-T2
IC710(4/8) SN74HC541ANS-T2
IC710(5/8) SN74HC541ANS-T2
IC710(6/8) SN74HC541ANS-T2
IC710(7/8) SN74HC541ANS-T2
IC710(8/8) SN74HC541ANS-T2

IC713 TC7SU04F-TE85L
IC733 TC7S00F-TE85L
IC716 TC7SU04F-TE85L

CN711
1 REDT-A
2 SWP-A
3 PBDT-A
4 GND
5 REDT-D
6 REPBOR
7 PIPCOR
8 SWP-D
9 PBDT-D
10 GND
RF-53,2-1
RF-53,2-2
RF-53,2-3
RF-53,2-5
RF-53,2-6
RF-53,2-7
RF-53,2-8
RF-53,2-9

IC1(1/2) SN74HC74ANS
IC1(2/2) SN74HC74ANS
IC2(4/4) SN74HC00ANS
IC2(1/4) SN74HC00ANS
IC2(3/4) SN74HC00ANS
IC2(2/4) SN74HC00ANS

IC718(6/8) SN74HC04ANS-T2

US-757 BOARD
-652-478-11)

SSP-8 BOARD (5/8)
BOARD NO.1-650-072-11
PCM-E7700

SSP-8 BOARD (5/8)
System Control,Signal Processor

Serial No.J ;10111 and higher
UC ;20056 and higher
EK ;50236 and higher

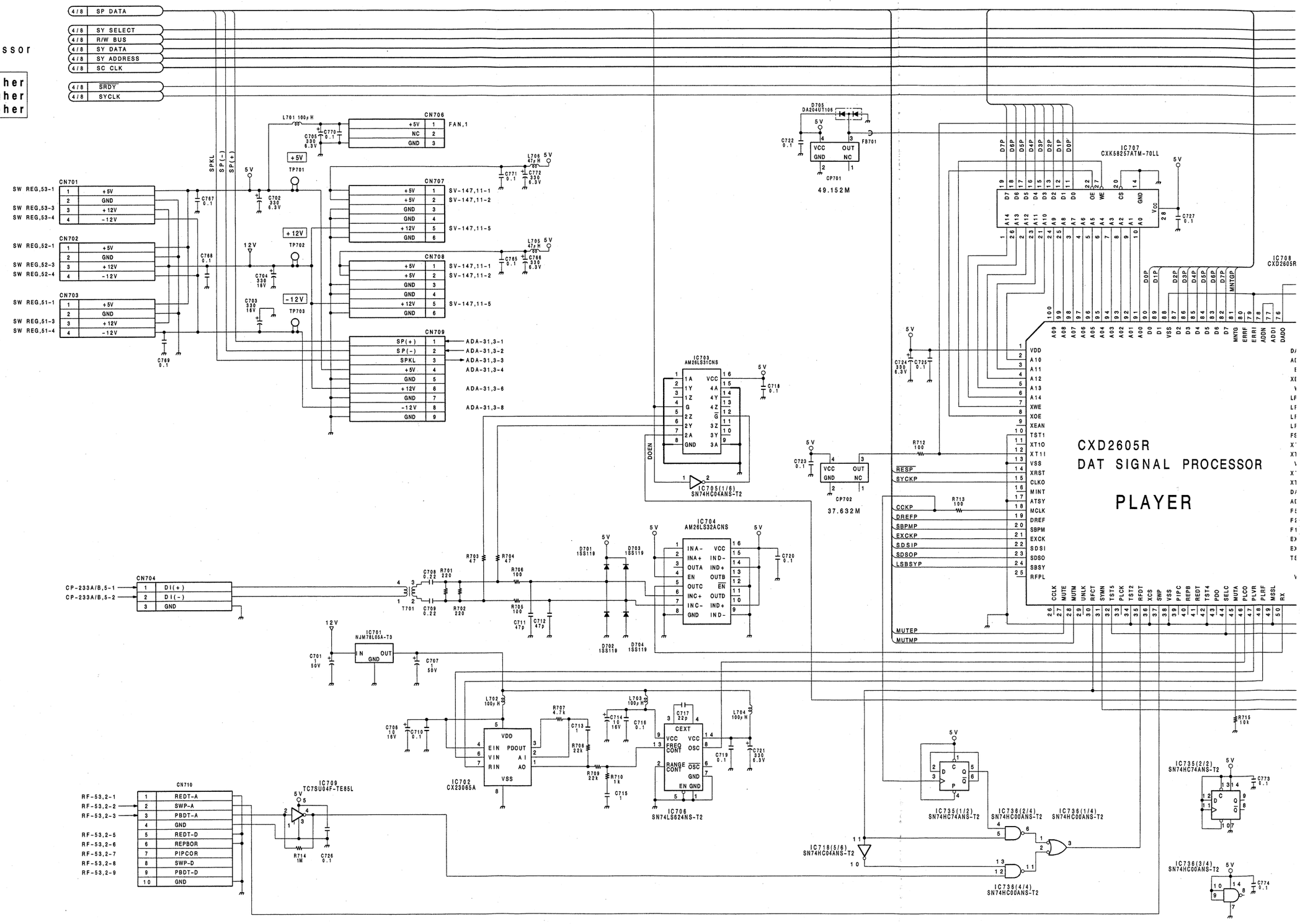

5-8(b)

A B C D E F G H

SP DATA 6/8
SY SELECT 6/8
R/W BUS 6/8
SY DATA 6/8
SY ADDRESS 6/8
SC CLK 6/8
SRDT 6/8
SYCLK 6/8

L PROCESSOR

'ER

IC708 CXD2605R

IC711 CXK58257ATM-70LL

IC712 CXD2605R

CXD2605R
DAT SIGNAL PROCESSOR
RECORDER/L

IC714 CXK58257ATM-70LL

IC715 CXD2605R

CXD2605R
DAT SIGNAL PROCESSOR
RECORDER/T

IC740(1/4) SN74HC08ANS-T2
IC740(2/4) SN74HC08ANS-T2
IC740(4/4) SN74HC08ANS-T2
IC735(2/2) SN74HC74ANS-T2
IC736(3/4) SN74HC00ANS-T2
IC737(1/2) SN74HC74ANS-T2
IC737(2/2) SN74HC74ANS-T2
IC738(1/4) SN74HC00ANS-T2
IC738(2/4) SN74HC00ANS-T2
IC738(3/4) SN74HC00ANS-T2
IC738(4/4) SN74HC00ANS-T2
IC739(1/4) SN74HC00ANS-T2
IC739(2/4) SN74HC00ANS-T2
IC739(3/4) SN74HC00ANS-T2
IC739(4/4) SN74HC00ANS-T2
IC713 TC7SU04F-TE85L
IC716 TC7SU04F-TE85L
IC718(6/6) SN74HC04ANS-T2

CN711
RF-53,2-1 SWP-A
RF-53,2-2 REDT-A
RF-53,2-3 PBDT-A
GND
RF-53,2-5 REDT-D
RF-53,2-6 REPBOR
RF-53,2-7 PIPCOR
RF-53,2-8 SWP-D
RF-53,2-9 PBDT-D
GND

F1024 TESTDO DADTP ADDTP BCK XBCK WCK LRCK F256 F128 EXSYP AREA-P SYMNP
DADTRL ADDTRL BCK LRCK F128 EXSYRL MUTARL REPBRL PIPCRL SWPRL AREA-R
DADTRT ADDTRT BCK LRCK F128 EXSYRT MUTART REPBRT PIPCRT SWPRT SYMNRT
RESRL SYCKRL ATSYRL CCKR DREFR SBPMRL EXCKRL SDSIRL SDSORL LSBSYRL MUTERL MUTMRL
RESRT SYCKRT ATSYRT SBPMRT EXCKRT SDSIRT SDSORT LSBSYRT MUTERT MUTMRT XAREA
XAREA REPBOR PIPCOR

22.5792M

SSP-8 BOARD (6/8)
System Control,Signal Processor

SP DATA	7/8
SY SELECT	7/8
R/W BUS	7/8
SY DATA	7/8
SY ADDRESS	7/8
SC CLK	7/8
SRDY	7/8
SYCLK	7/8

CN712

DACK	1	ADA-31,2-1
DALE	2	ADA-31,2-2
DAD1	3	ADA-31,2-3
DAD2	4	ADA-31,2-4
DEMP	5	ADA-31,2-5
XLRCK	6	ADA-31,2-6
ADBC	7	ADA-31,2-7
F128	8	ADA-31,2-8
DTAD	9	ADA-31,2-9
DOWN	10	ADA-31,2-10
HIMP	11	ADA-31,2-11
PH0	12	ADA-31,2-12
PH1	13	ADA-31,2-13
GND	14	
GND	15	

IC720(1/2) SN74HC74ANS-T2
IC720(2/2) SN74HC74ANS-T2
IC723 SN74HC164ANS-T2
IC717(1/4) SN74HC08ANS-T2
IC705(4/6) SN74HC04ANS-T2
IC705(5/6) SN74HC04ANS-T2
IC721(1/2) SN74HC74ANS-T2
IC717(2/4) SN74HC08ANS-T2
IC724 SN74HC164ANS-T2
IC728 SN74HC166ANS-T2
MTDT
IC705(6/6) SN74HC04ANS-T2
IC721(2/2) SN74HC74ANS-T2
IC718(1/6) SN74HC04ANS-T2
IC722(1/2) SN74HC74ANS-T2
IC718(2/6) SN74HC04ANS-T2
IC705(3/6) SN74HC04ANS-T2
IC718(3/6) SN74HC04ANS-T2
IC722(2/2) SN74HC74ANS-T2
IC725 SN74HC164ANS-T2
IC729 SN74HC166ANS-T2
IC726 SN74HC164ANS-T2
IC730 SN74HC166ANS-T2
IC727 SN74HC164ANS-T2
IC731 SN74HC166ANS-T2
C752 0.1
C753 0.1
C754 0.1
C755 0.1
C757 0.1
C758 0.1
C759 0.1
C760 0.1
C761 0.1
C762 0.1
C763 0.1
C764 0.1
E701 E702 E705 E707

SSP-8 BOARD (6/8)

BOARD NO.1-650-072-11
PCM-E7700

SSP-8 BOARD (6/8)
System Control,Signal Processor

Serial No.
J ;10001 to 10110
UC;20001 to 20055
EK;50001 to 50235

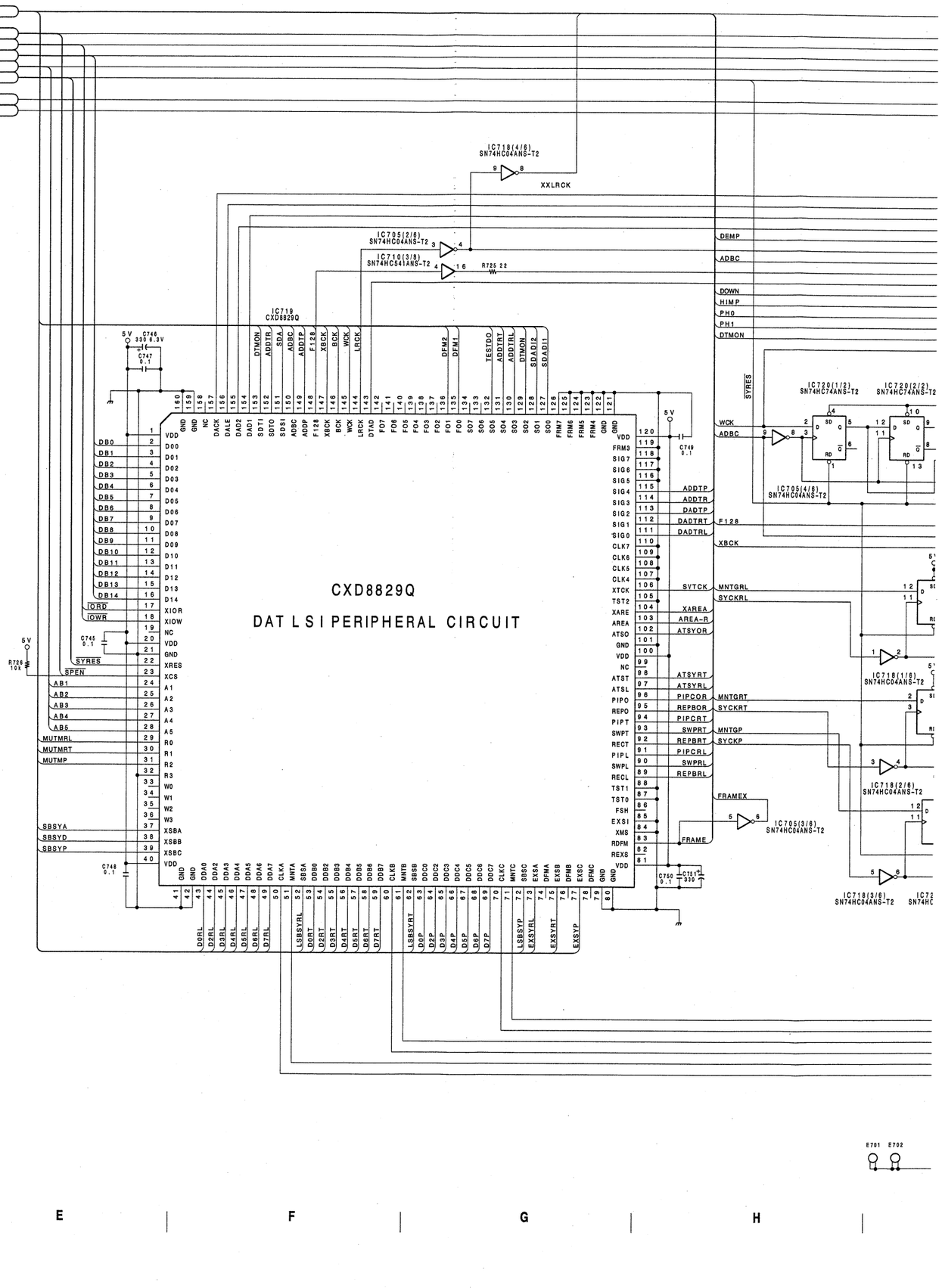

5-9(a)

A | B | C | D | E | F | G | H

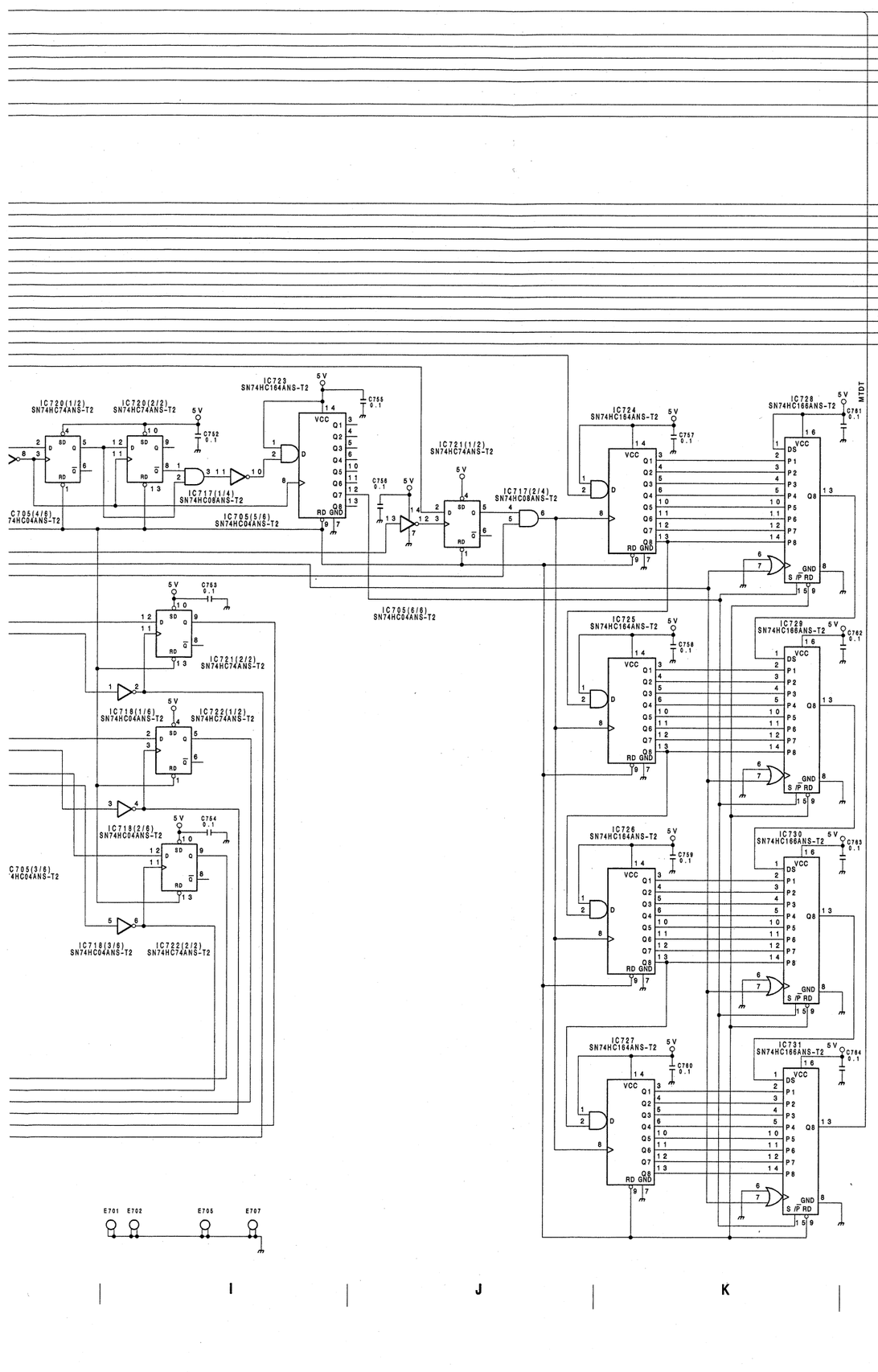

SSP-8 BOARD (6/8)

BOARD NO.1-650-072-11
PCM-E7700

SSP-8 BOARD (6/8)

System Control,Signal Processor

Serial No.J ;10111 and higher
UC;20056 and higher
EK;50236 and higher

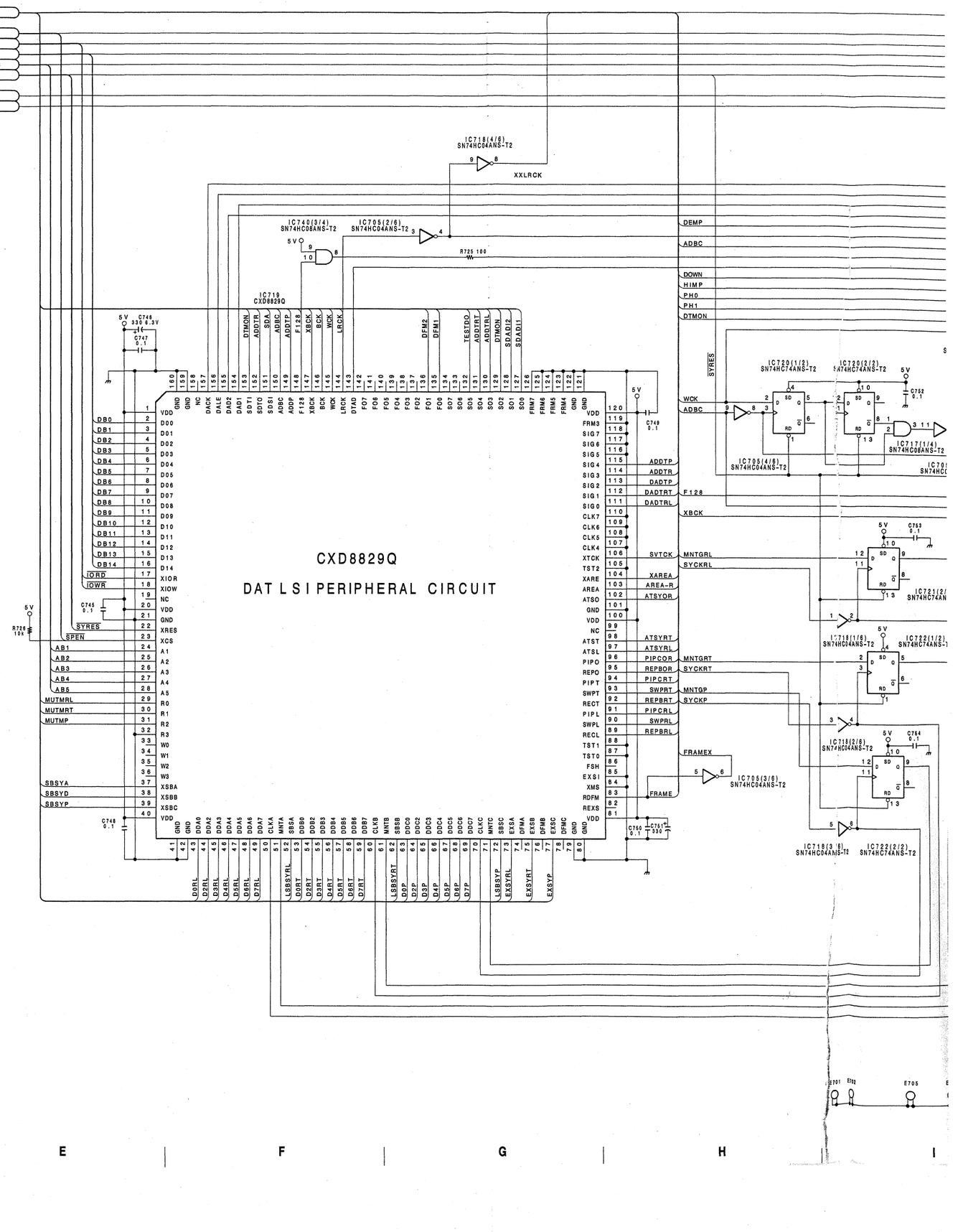

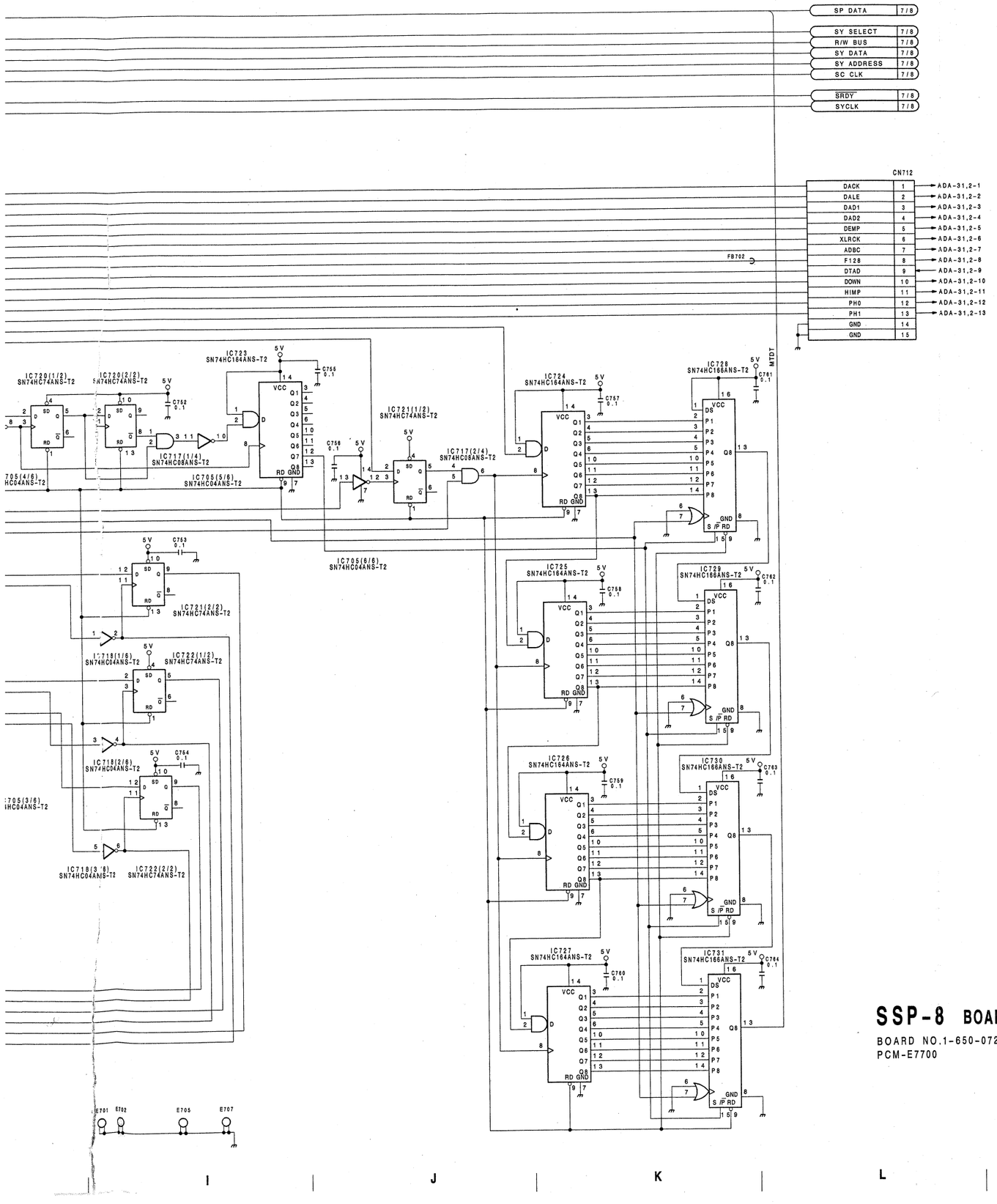

SSP-8 BOARD (6/8)

BOARD NO.1-650-072-12
PCM-E7700

SSP-8 BOARD (7/8)

System Control,Signal Processor

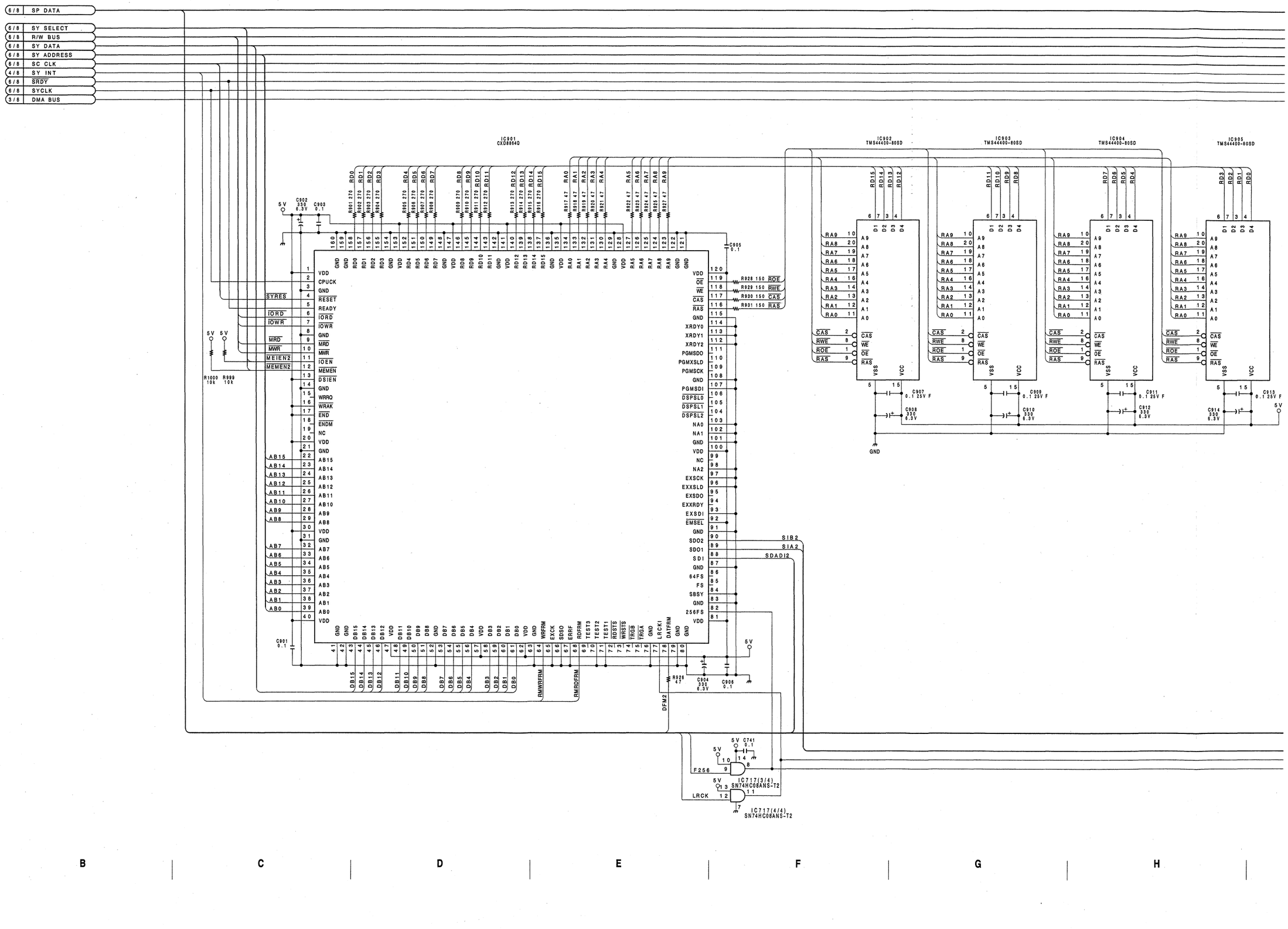

SP DATA 8/8

SC CLK 8/8

DSP 8/8

IC905 TMS44400-80SD

IC906 CXD8864Q

IC907 TMS44400-80SD

IC908 TMS44400-80SD

IC909 TMS44400-80SD

IC910 TMS44400-80SD

SSP-8 BOARD (7/8)

BOARD NO.1-650-072-11
PCM-E7700

SSP-8 BOARD (7/8)

System Control,Signal Processor

5-10

A | B | C | D | E | F | G | H

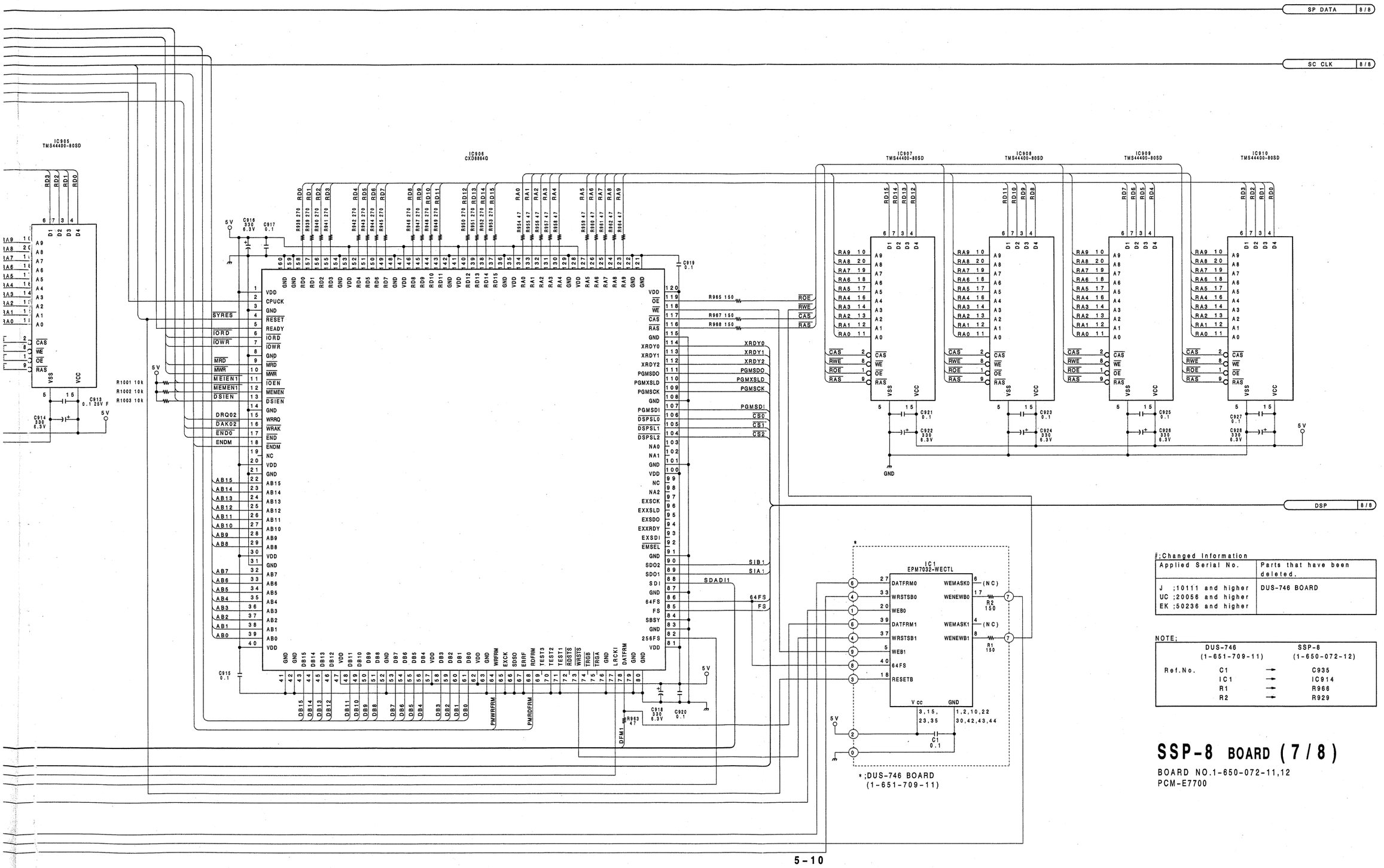

#;Changed Information

Applied Serial No.	Parts that have been deleted.
J ;10111 and higher UC ;20056 and higher EK ;50236 and higher	DUS-746 BOARD

NOTE;

	DUS-746 (1-651-709-11)		SSP-8 (1-650-072-12)
Ref.No.	C1	→	C935
	IC1	→	IC914
	R1	→	R966
	R2	→	R929

SSP-8 BOARD (7/8)

BOARD NO.1-650-072-11,12
PCM-E7700

I J K L M N O

SSP-8 BOARD (8/8)
System Control,Signal Processor

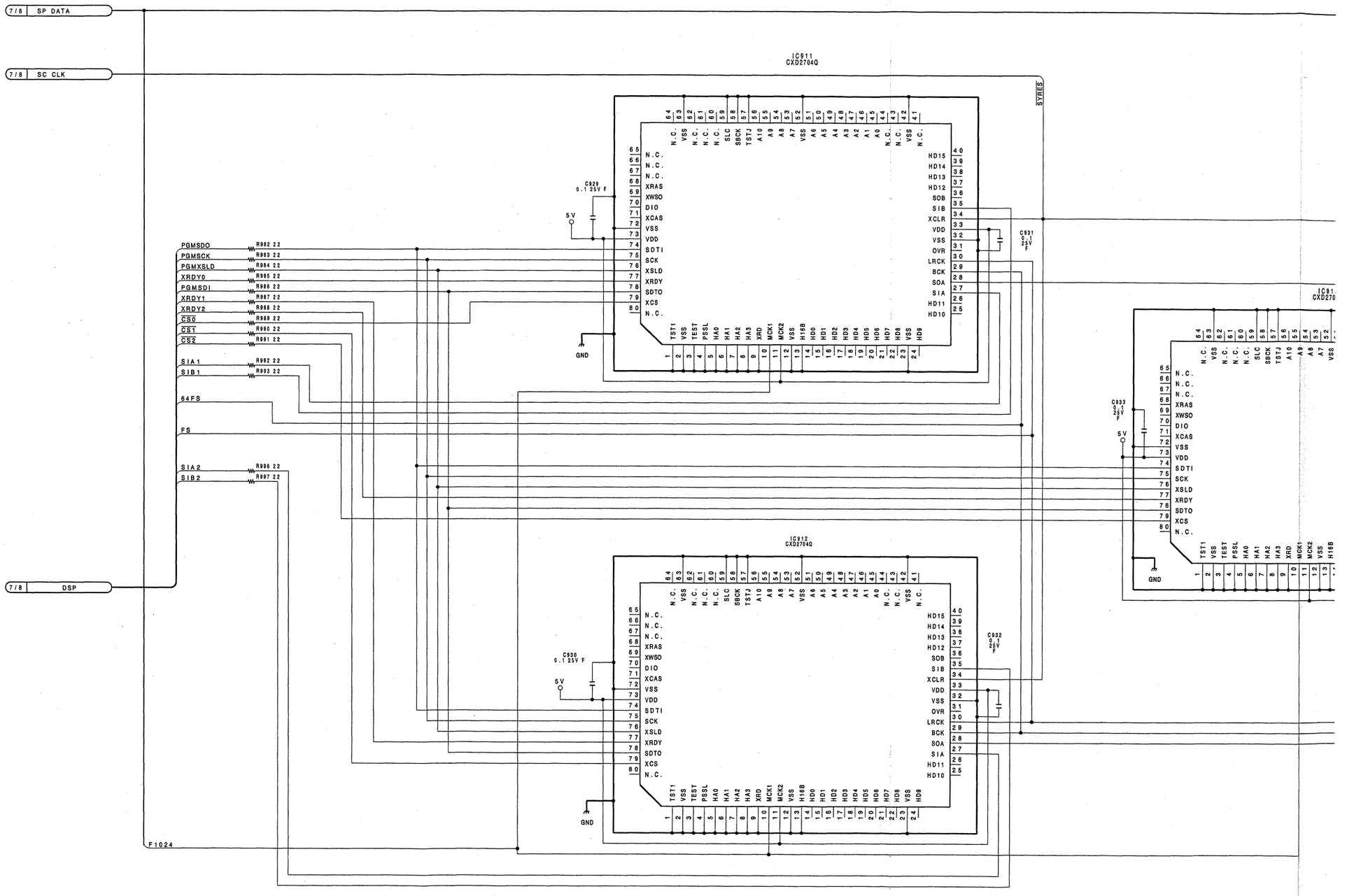

5-11

A | B | C | D | E | F | G | H

SSP-8(8/8)

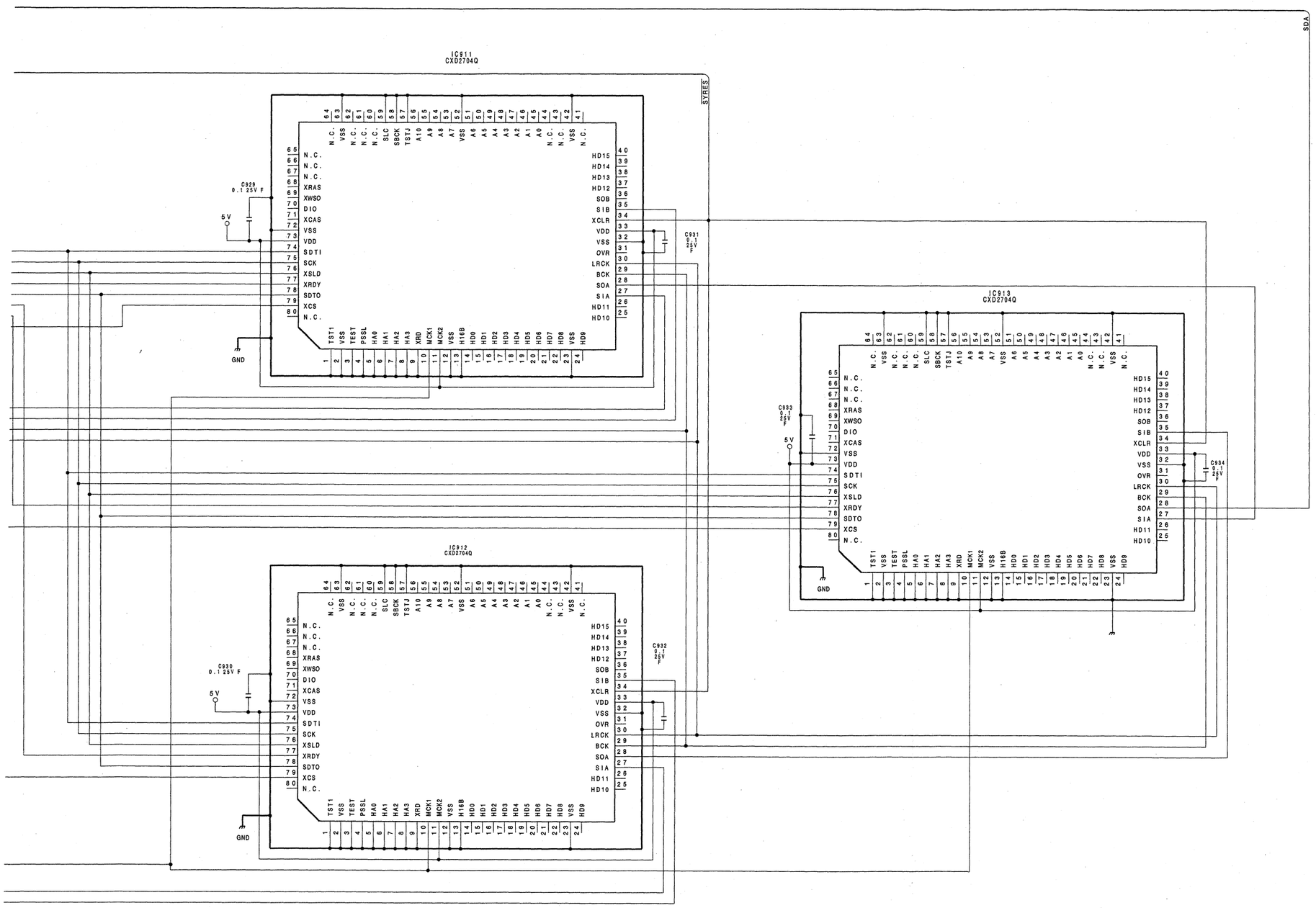

SSP-8 BOARD (8/8)

BOARD NO.1-650-072-11
PCM-E7700

5-11

SSP-8 BOARD (8/8)
System Control,Signal Processor

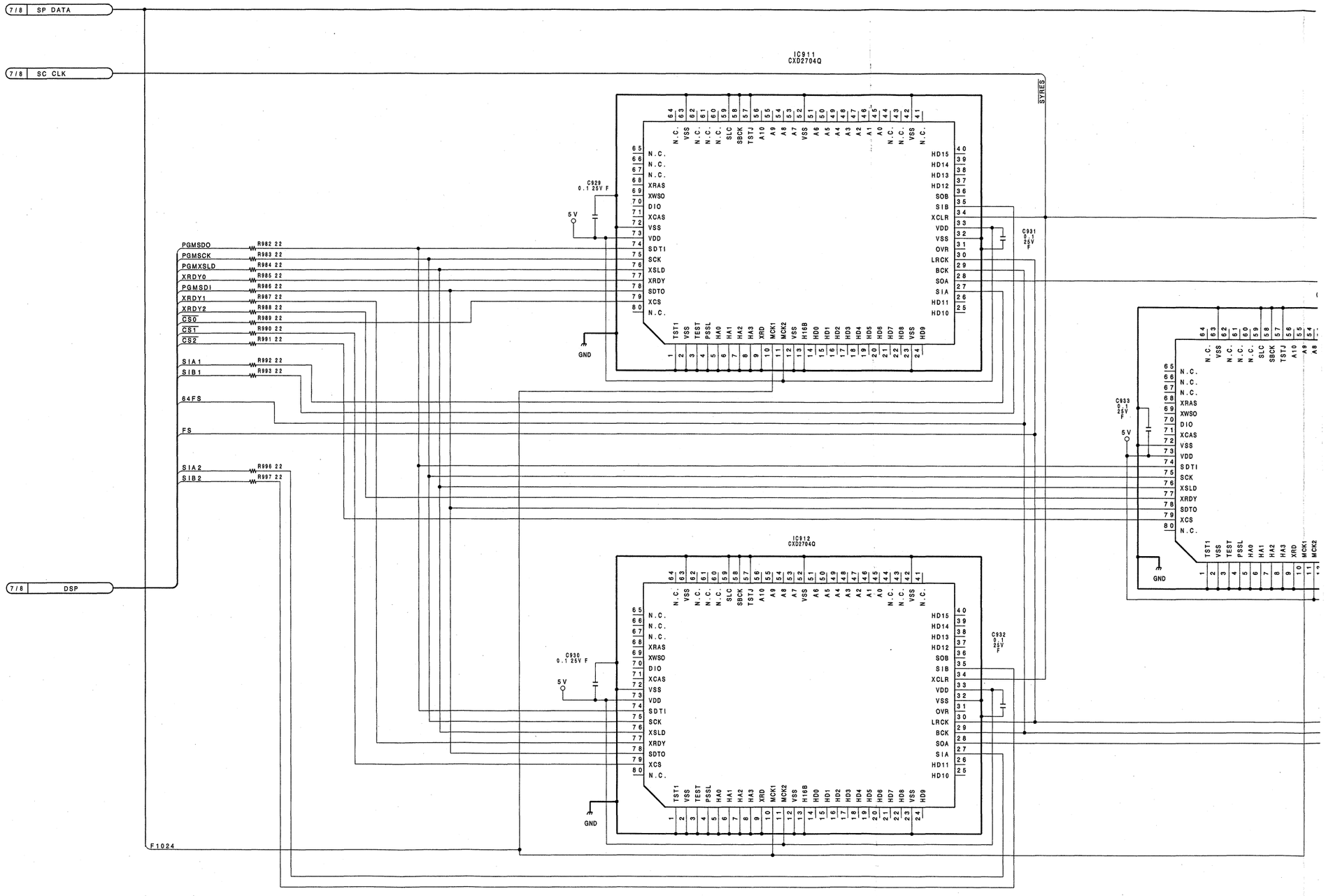

A | B | C | D | E | F | G | H

SSP-8(8/8)

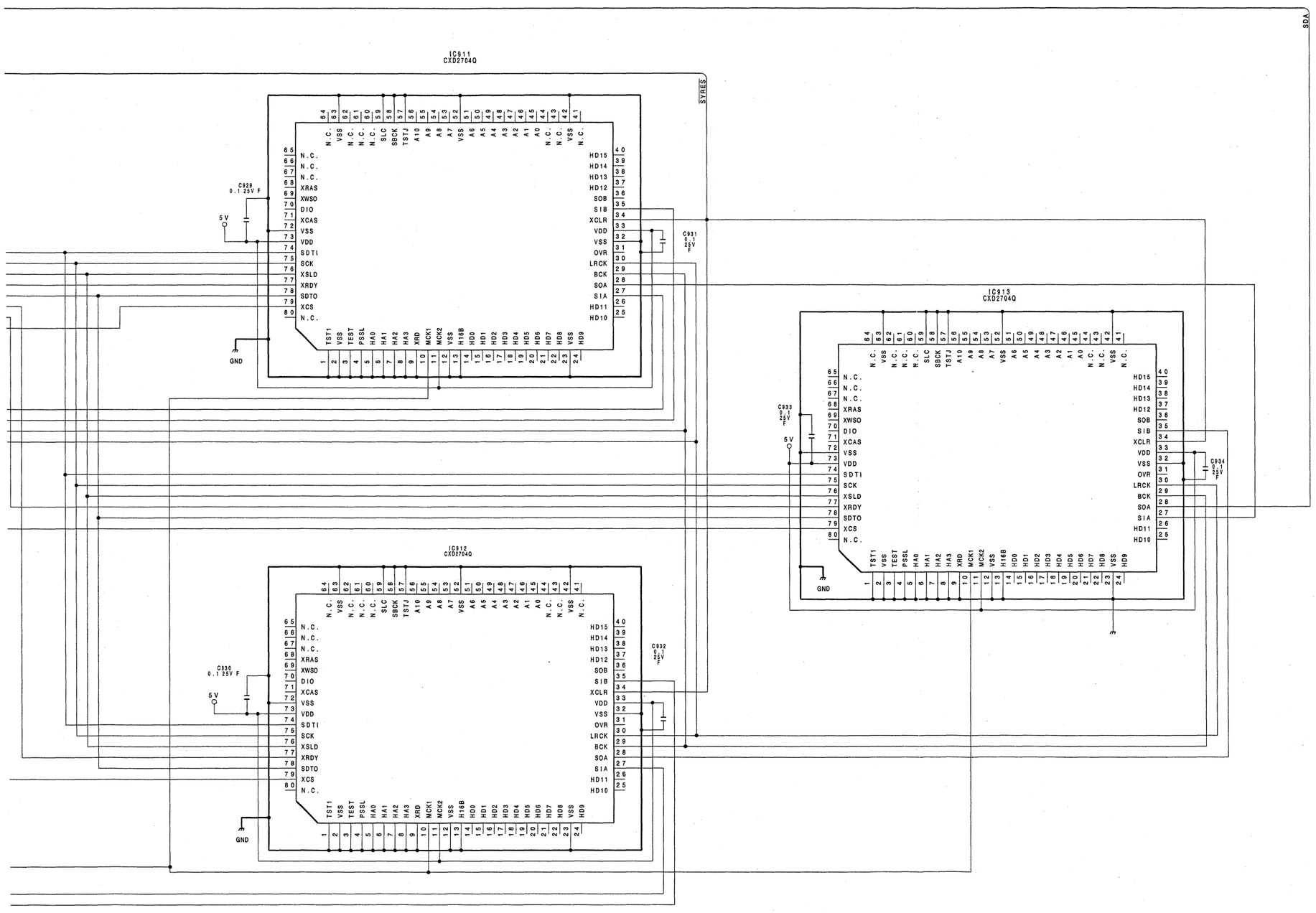

SSP-8 BOARD (8/8)

BOARD NO.1-650-072-11,12
PCM-E7700

5-11

RF-53 RF-53

RF-53 BOARD
RF Amplifier

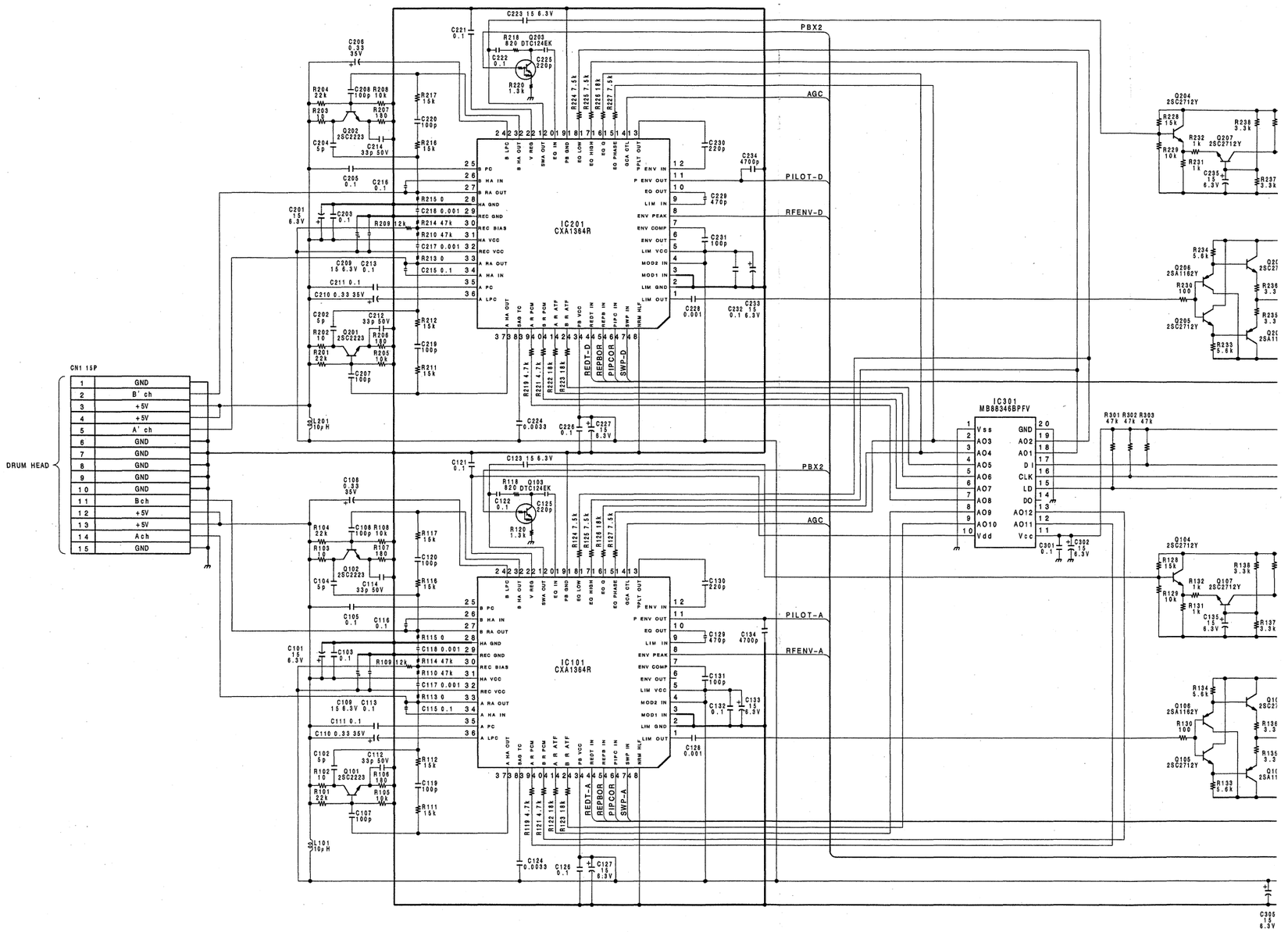

5-12

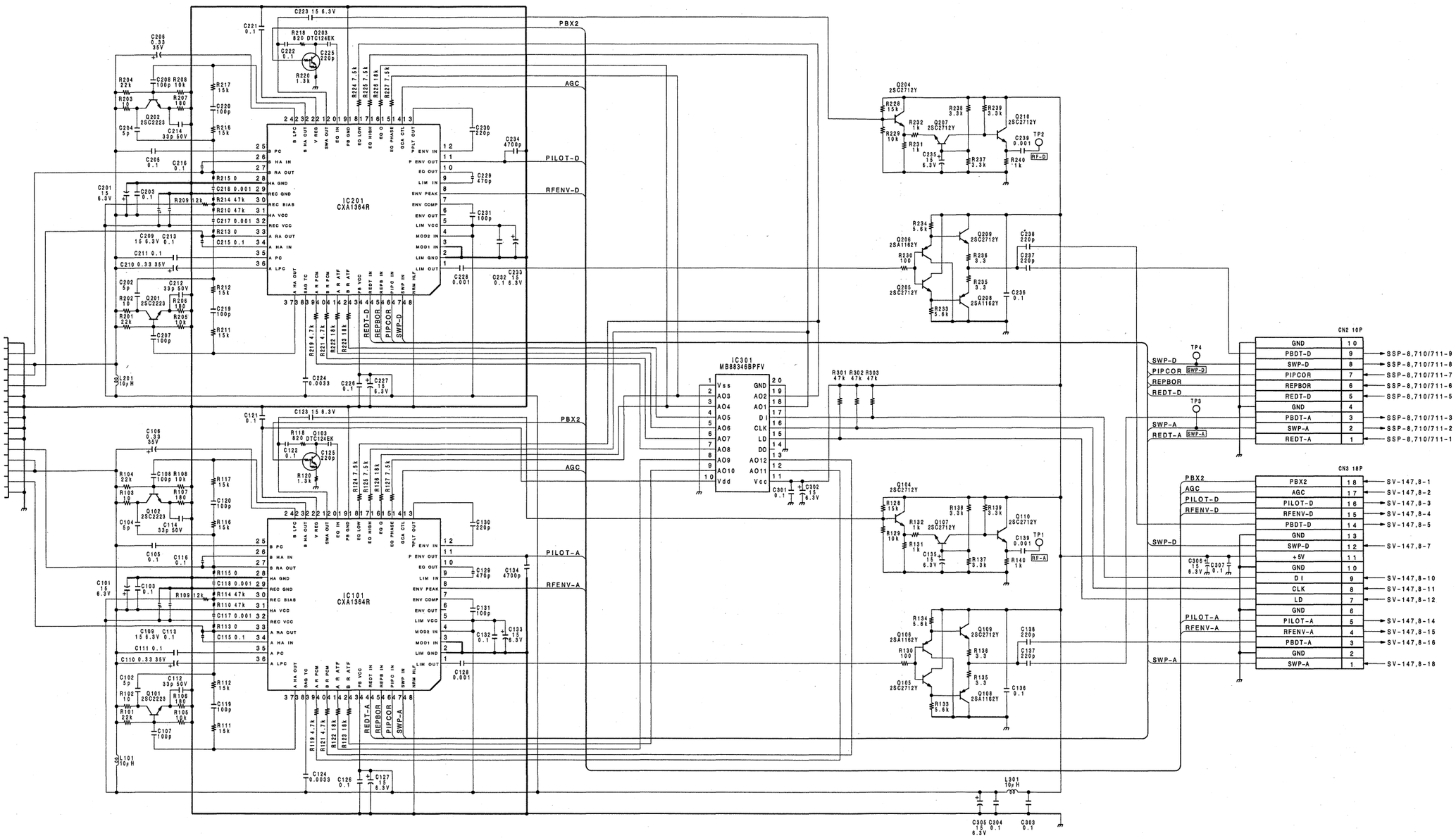

RF-53 BOARD

BOARD NO.1-650-046-11
PCM-E7700

E F G H I J K

RF-53 RF-53

RF-53 BOARD
RF Amplifier

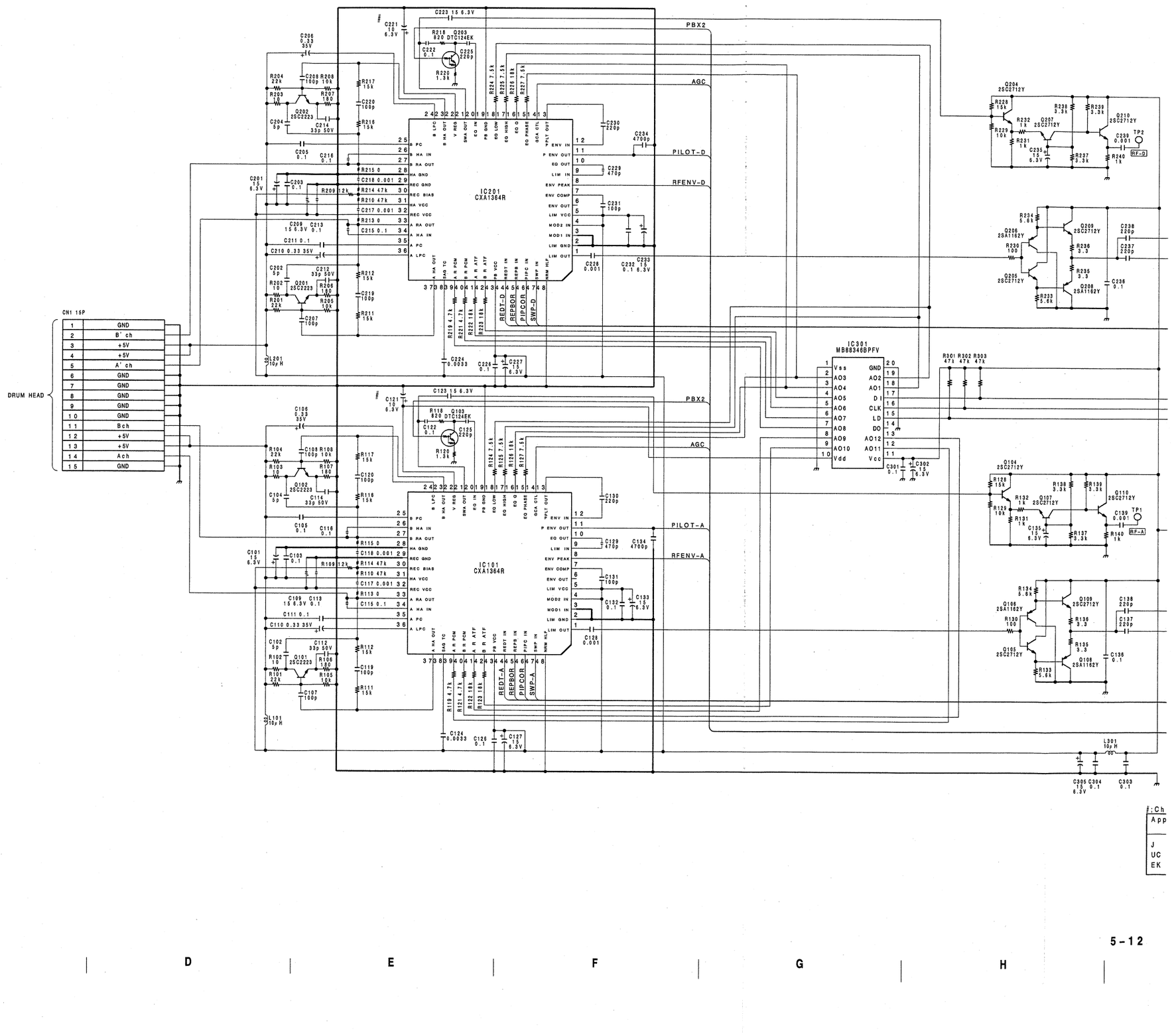

#:Ch	App
J	
UC	
EK	

5-12

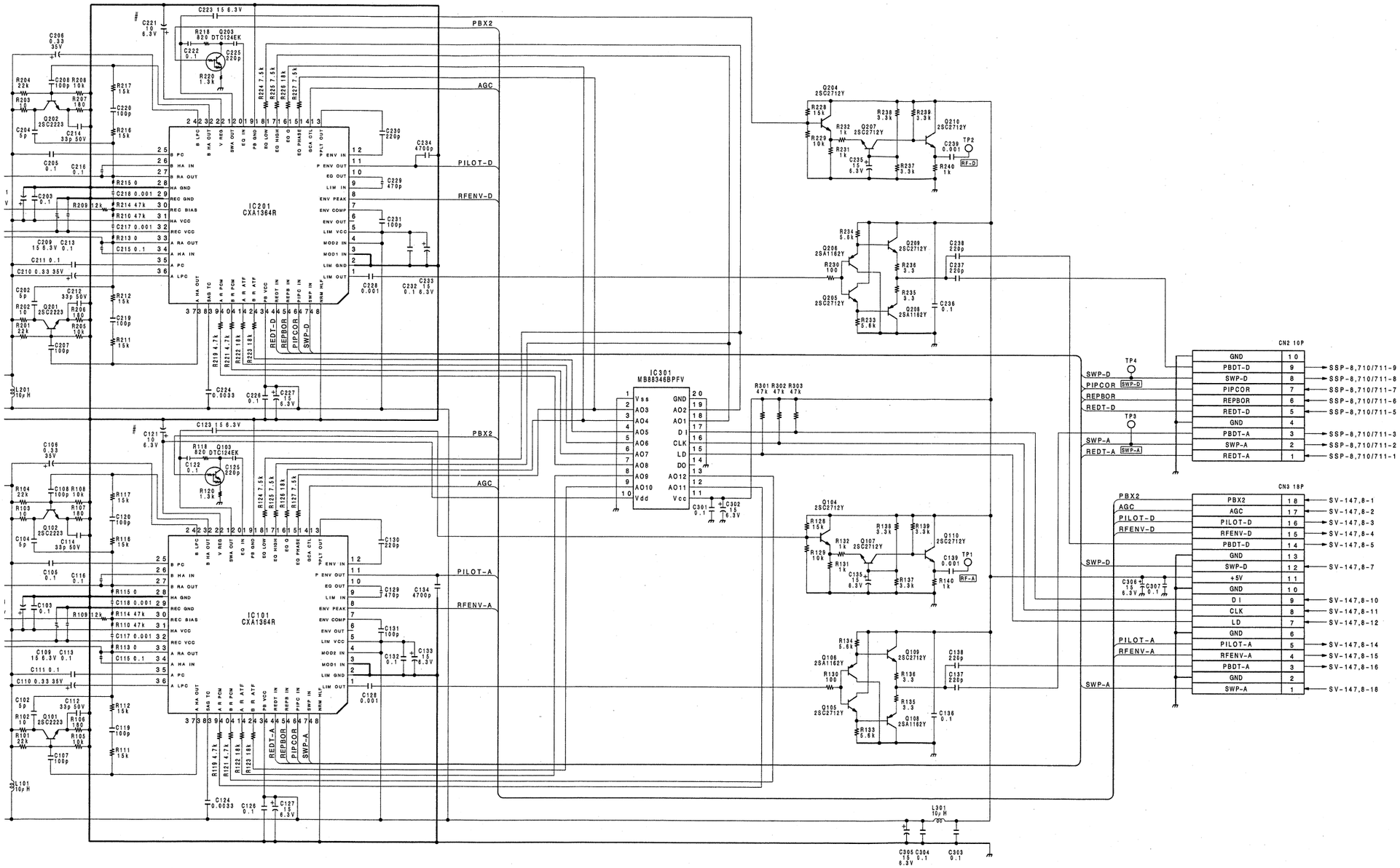

#:Changed Information

Applied Serial No.	Parts that have been changed.
J ;10111 and higher UC ;20056 and higher EK ;50236 and higher	C121,221 0.1μF 25V → 10μF 6.3V

RF-53 BOARD

BOARD NO.1-650-046-11,12
PCM-E7700

E F G H I J K L

SV-147 BOARD
Servo

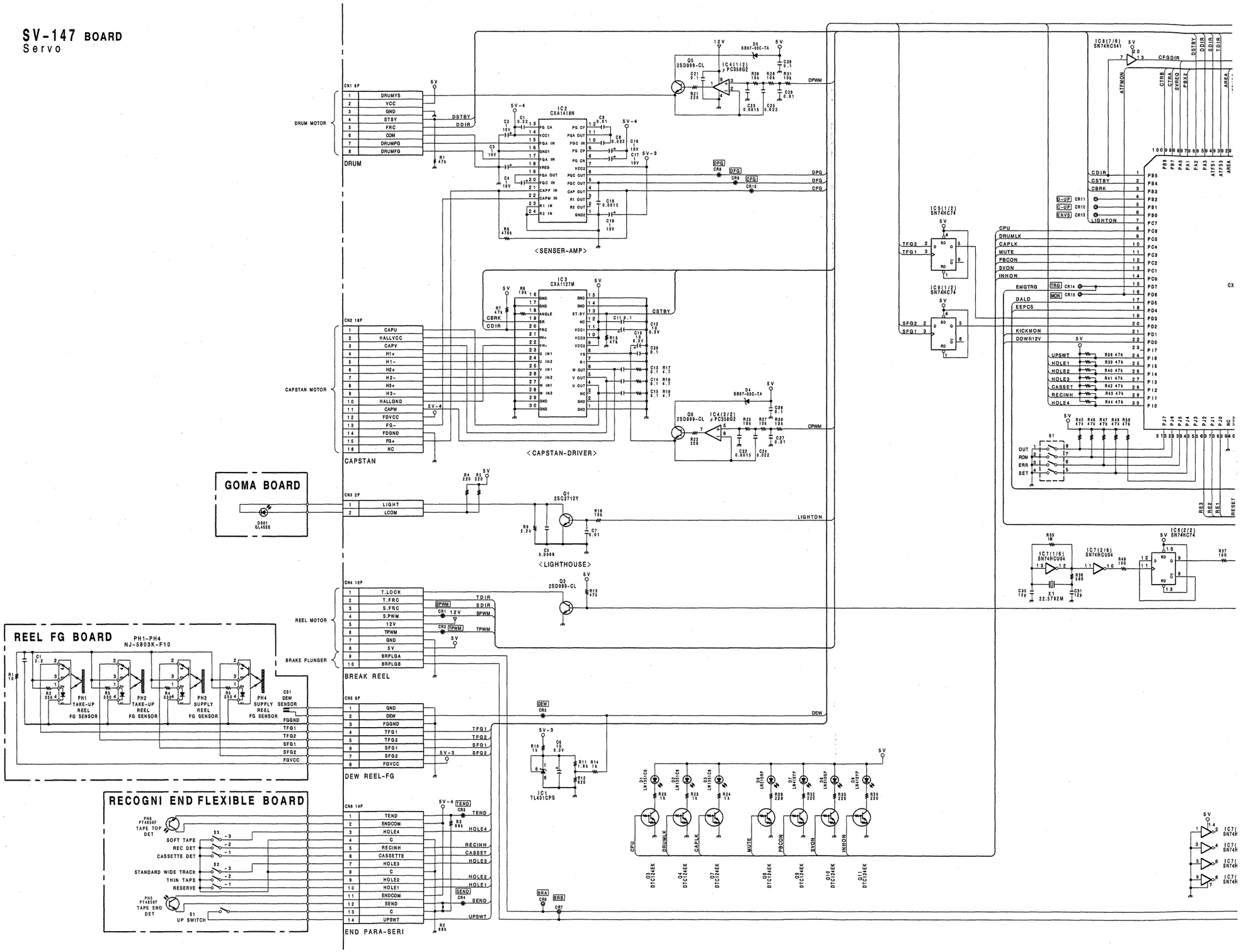

A | B | C | D | E | F | G | H

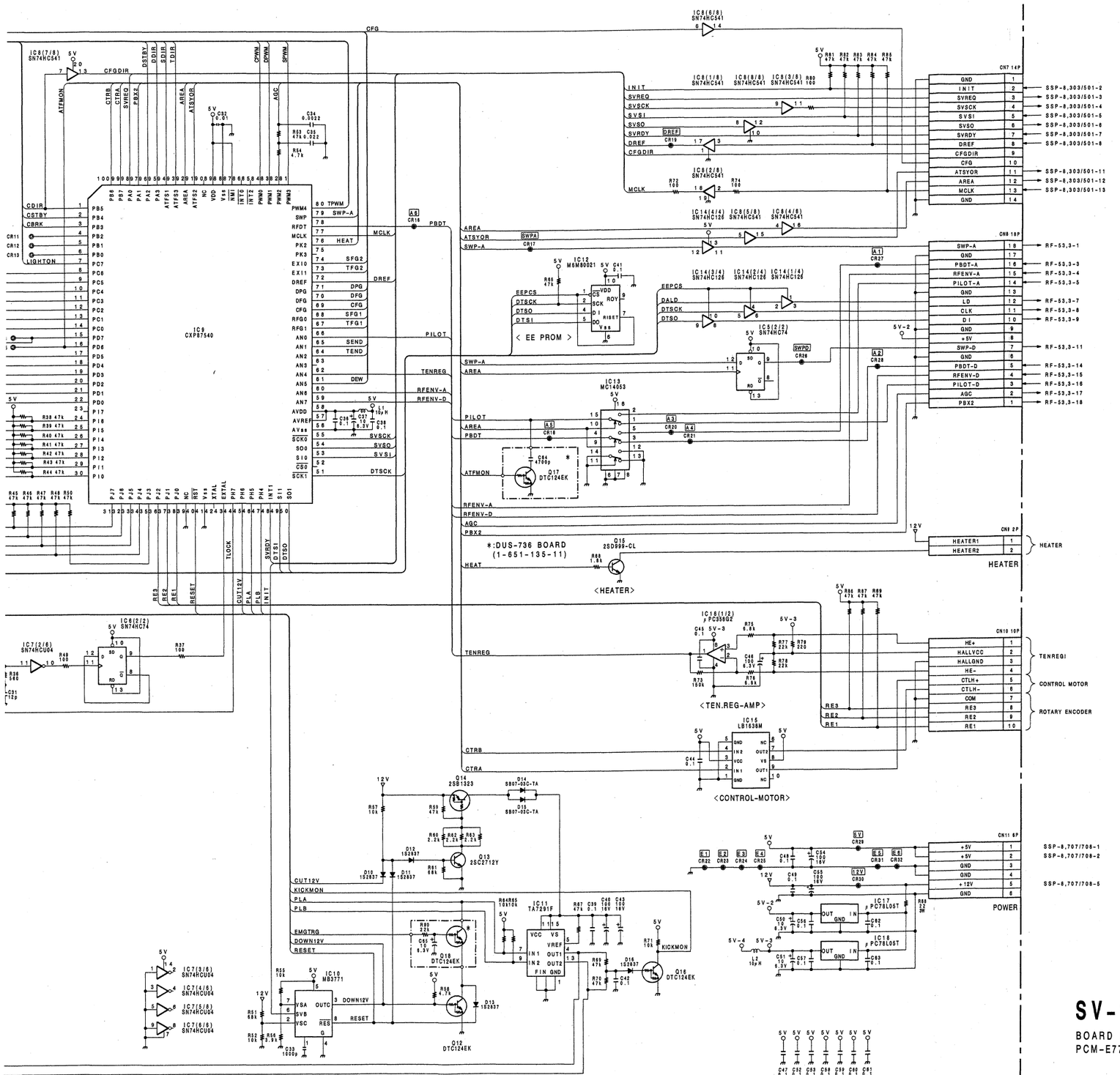

SV-147 BOARD

BOARD NO.1-650-045-11
PCM-E7700

SV-147 BOARD
Servo

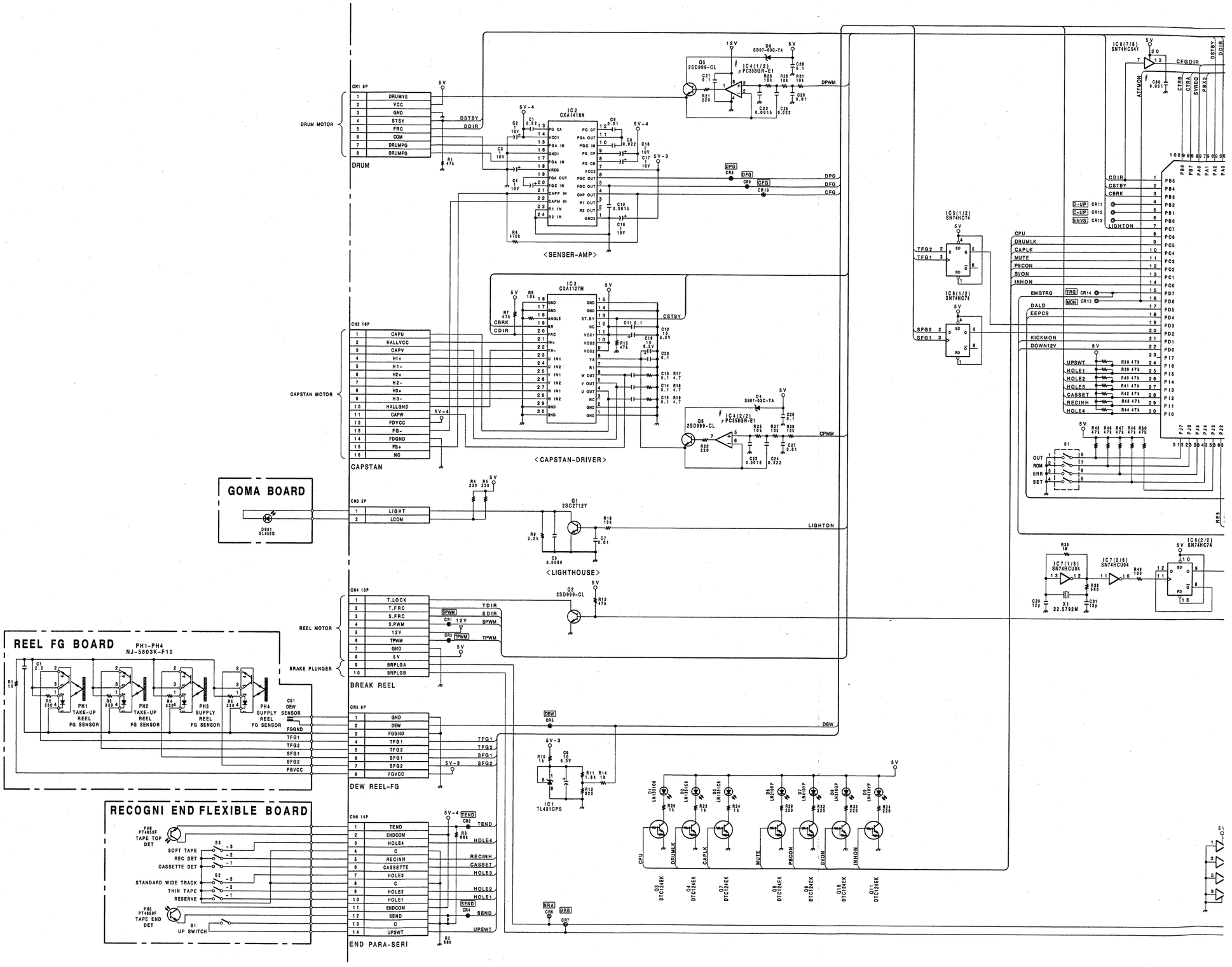

A | B | C | D | E | F | G | H

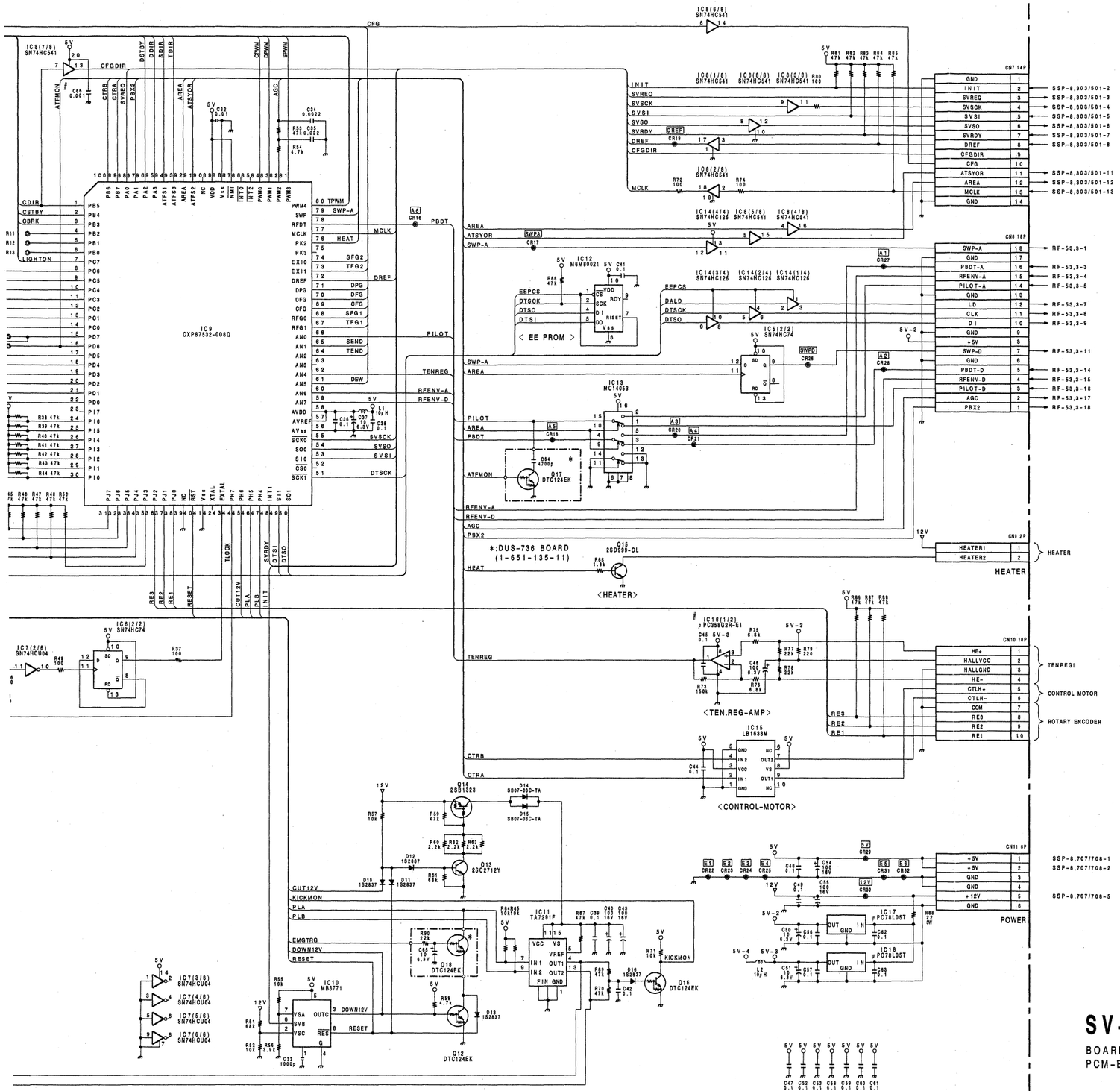

;Changed Information			
Applied Serial No.	Parts that have been changed.	Parts that have been added.	Parts that have been deleted.
J ;10111 and higher UC ;20056 and higher EK ;50236 and higher	IC4,16 μPC358G2 → μPC358GR-E1	C66	DUS-736 BOARD

SV-147 BOARD

BOARD NO.1-650-045-11,12
PCM-E7700

FRAME WIRING

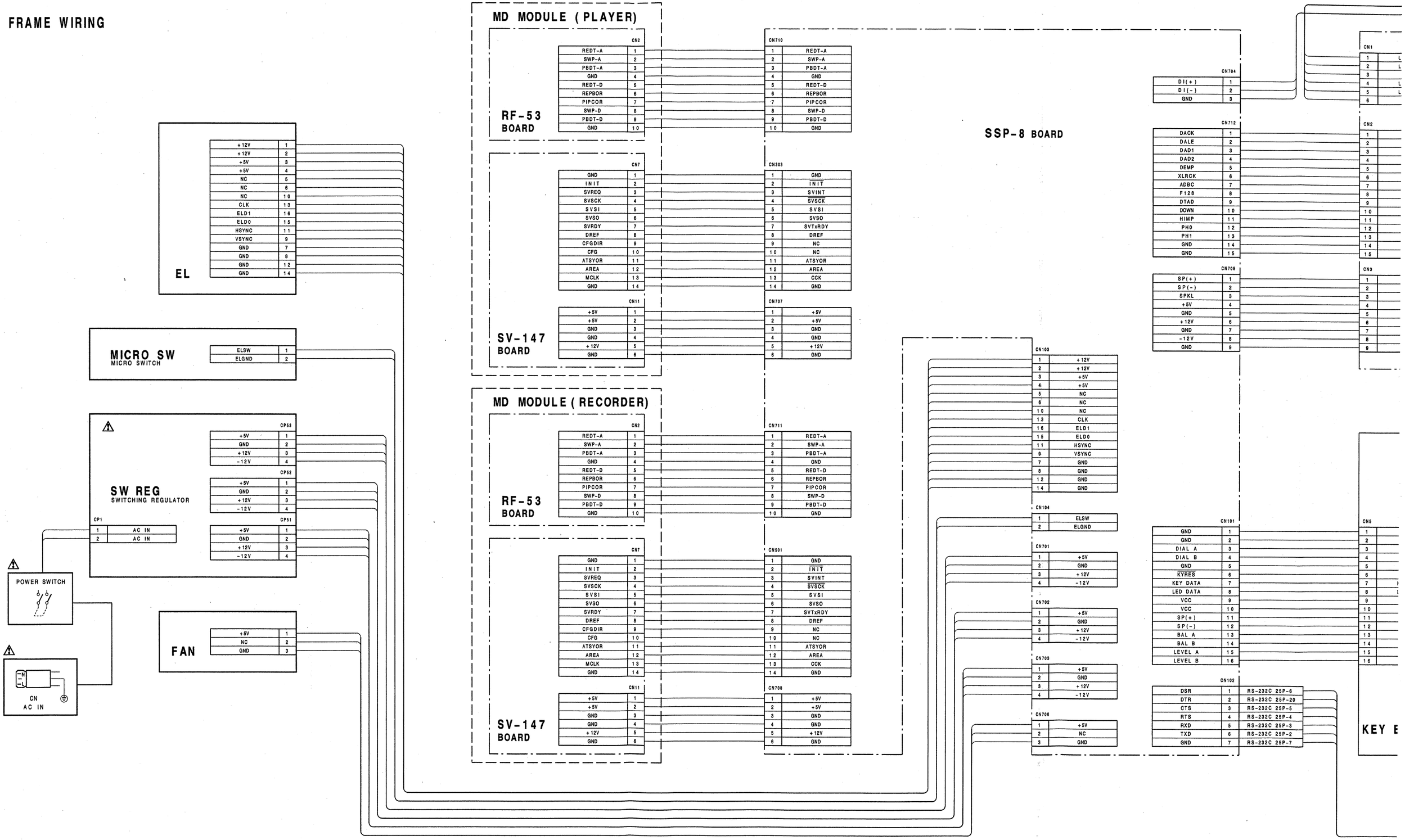

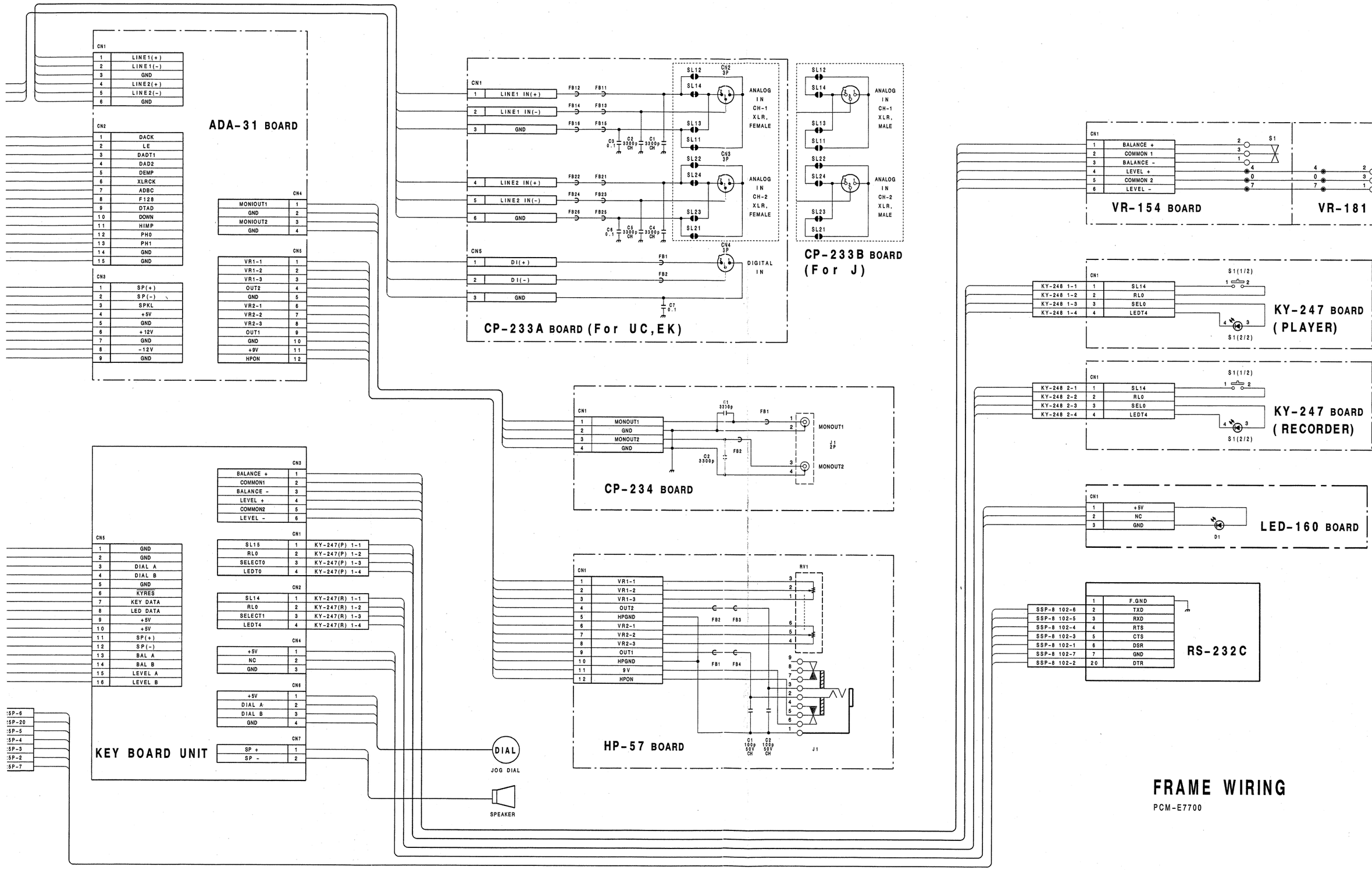

FRAME WIRING

PCM-E7700

SECTION 6
SEMICONDUCTOR PIN ASSIGNMENTS

この章の図の中には互換性のないダイオード、トランジスタ、ICが併記されていることがあります。部品を交換をするときには必ず部品表を参照して下さい。
等価回路はICメーカーのData Bookに従いました。

The chart in this section may sometimes show diodes, transistors, and ICs that are not interchangeable. When replacing a component, be sure to refer to the parts list. The circuit diagram of each IC is obtained from the IC data book published by the manufacturer.

TYPE	PAGE
<DIODE>	
1S2837	6-2
1SS119	6-2
CL-150PG-CD	6-2
CL-150R-CD	6-2
CL-150Y-CD	6-2
DA204U	6-2
EC10DS2	6-2
GL-1EG111	6-2
GL453	6-2
GL453S	6-2
LA-301VB	6-2
LN1351C6	6-2
LN210RP	6-2
LN310GP	6-2
LN410YP	6-2
MA152WK	6-2
NSQ03A04	6-2
SB07-03C	6-2
<TRANSISTOR>	
2SA1162Y	6-2
2SB1323	6-2
2SC2223	6-2
2SC2712	6-2
2SC2712Y	6-2
2SD773	6-2
2SD999-CLCK	6-2
DTA124EK	6-2
DTC124EK	6-2
PT4850F	6-2
THS117	6-2
<IC>	
74F244SJ	6-3
AM26LS31CNS	6-3
AM26LS32ACNS	6-3
CS5326-KP	6-3
CX23065A	6-4
CXA1127AM	6-4
CXA1364R	6-5
CXA1418N	6-4
CXD1102Q	6-6
CXD2605R	6-7
CXD2704Q	6-8
CXD8864Q	6-9
CXK581100TM-10LL	6-8
CXK58257ATM-70LL	6-10
HD14053BFP	6-10
LB1638M	6-11
LT1134CS	6-10
M6M80021FP	6-11
MB3771PF	6-11
MB8421-90LPFQ	6-11
MB8431-90LPFQ	6-12
MB88346BPFV	6-12
MC14053BF	6-10
MSM5832RS	6-13
MSM6338MS-K	6-13
NJL5803K-F10	6-13
NJM2073M	6-13
NJM4556M-A	6-13
NJM4560M	6-14
NJM7805FA	6-14
NJM7809FA	6-14
NJM78L05A	6-14
NJM7905FA	6-14
NJM7909FA	6-14
PALCE16V8Q-25JC	6-14
PCM56P	6-14
SC7S00F	6-15
SN74HC00ANS	6-15
SN74HC02ANS	6-15
SN74HC04ANS	6-15
SN74HC08ANS	6-15
SN74HC126ANS	6-15
SN74HC139ANS	6-15
SN74HC14ANS	6-15
SN74HC164ANS	6-16
SN74HC166ANS	6-16
SN74HC21ANS	6-16
SN74HC257ANS	6-16
SN74HC32ANS	6-16
SN74HC541ANS	6-16
SN74HC574ANS	6-17
SN74HC74ANS	6-17
SN74HCU04ANS	6-15
SN74LS03NS	6-17
SN74LS624NS	6-17
ST93CS56M1	6-17
TA7291F	6-17
TA7809S	6-18
TC4052BFHB	6-18
TC4S66F	6-18
TC7S00F	6-15
TC7SU04F	6-18
TD62381F	6-18
TL431CPS	6-18
TL7705CPS-B	6-18
TMS27C240-12JL	6-19
TMS44400-80SD	6-19
UPC358G2	6-19
UPC78L05T	6-19
UPD4702G	6-19
UPD70216L	6-20
UPD71054GB-10-3B4	6-21
UPD71055GB-10-3B4	6-21
UPD71059GB-10-3B4	6-23
UPD71101GD-10-5BB	6-22
UPD72020GC-8-3B6	6-24
XRA17809T	6-14

<DIODE>

1S2837
MA152WK

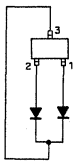

1SS119

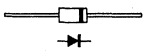

CL-150PG-CD ; GREEN
CL-150R-CD ; RED

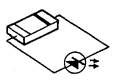

CL-150Y-CD ; AMBER

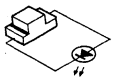

DA204U

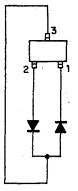

EC10DS2
NSQ03A04

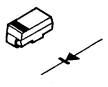

GL-1EG111 ; YELLOWISH GREEN

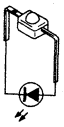

GL453 ; INFRARED
GL453S ; INFRARED

LA-301VB ; RED

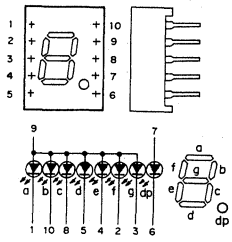

LN1351C6

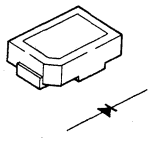

LN210RP ; RED
LN310GP ; GREEN
LN410YP ; YELLOW

SB07-03C

<TRANSISTOR>

2SA1162Y

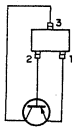

2SB1323

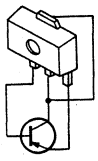

2SC2223
2SC2712
2SC2712Y

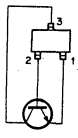

2SD773

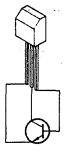

2SD999-CLCK

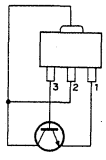

DTA124EK (R1 = 22K, R2 = 22K)

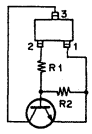

DTC124EK (R1 = 22K, R2 = 22K)

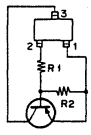

PT4850F

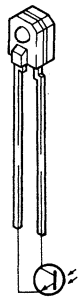

THS117

Hall Element
— Equivalent Circuit —

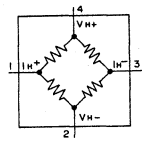

<IC>

74F244SJ (NS) FLAT PACKAGE

TTL 3-STATE SCHMITT TRIGGER BUFFER/DRIVER
– TOP VIEW –

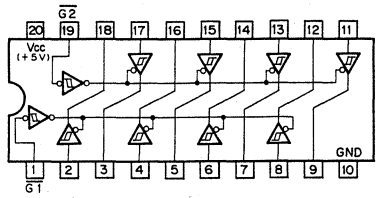

G	A	Y
0	0	0
0	1	1
1	X	HI-Z

0: LOW LEVEL
1: HIGH LEVEL
X; DON'T CARE
HI-Z; HIGH IMPEDANCE

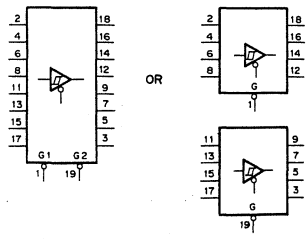

AM26LS31CNS (TI) FLAT PACKAGE

HIGH SPEED DIFFERENTIAL LINE DRIVER
– TOP VIEW –

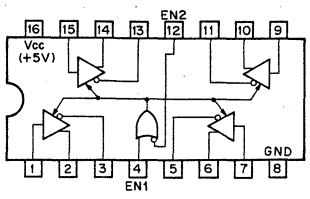

FUNCTION TABLE

EN2	EN1	OUTPUT
0	0	ENABLE
0	1	ENABLE
1	0	HI-Z
1	1	ENABLE

0; LOW LEVEL
1; HIGH LEVEL
HI-Z; HIGH IMPEDANCE

AM26LS32ACNS (TI) FLAT PACKAGE

HIGH SPEED DIFFERENTIAL LINE RECEIVER
– TOP VIEW –

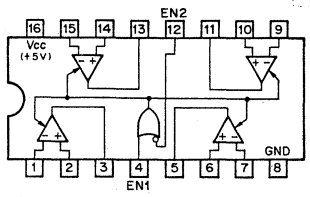

FUNCTION TABLE

EN2	EN1	OUTPUT
0	0	ENABLE
0	1	ENABLE
1	0	HI-Z
1	1	ENABLE

0; LOW LEVEL
1; HIGH LEVEL
HI-Z; HIGH IMPEDANCE

	SENSE	INPUT VOLT
C32/LS32	±200mV	±7V
LS33	±500mV	±15V

CS5326-KP (ASAHIKASEI)

16-BIT OVERSAMPLING STEREO A/D CONVERTER
– TOP VIEW –

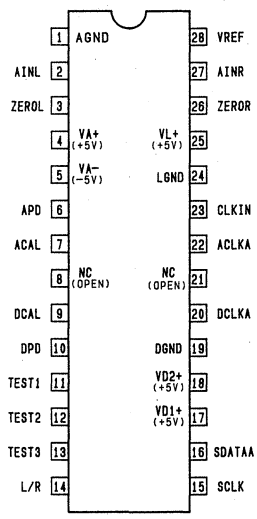

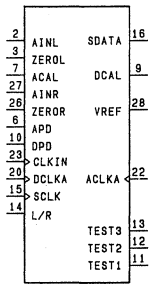

A GND ;ANALOG GROUND
D GND ;DIGITAL GROUND
VA + ;Vcc FOR ANALOG
VA – ;VEE FOR ANALOG
VD1 + ;Vcc FOR DIGITAL
VD2 + ;Vcc FOR DIGITAL
VL ;Vcc FOR DIGITAL

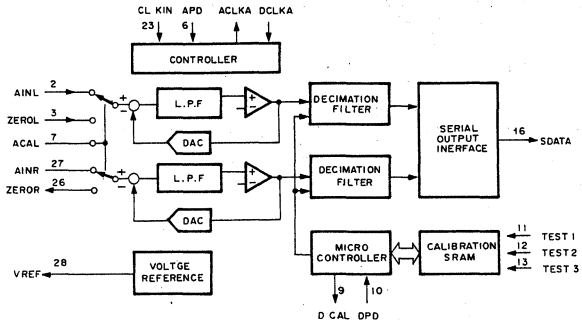

INPUT

ACAL	; ANALOG CALIBRATION NORMALLY, CONNECT TO DCAL PIN.
AINL	; L CHANNEL ANALOG INPUT
AINR	; R CHANNEL ANALOG INPUT
APD	; ANALOG POWER DOWN (H = POWER DOWN MODE) NORMALLY, CONNECT TO DPD PIN.
CLKIN	; MASTER CLOCK
DCLKA	; DIGITAL SYSTEM CLOCK CONNECT TO ACLKA PIN.
DPD	; DIGITAL POWER DOWN (H = POWER DOWN MODE)
L/R	; INPUT CHANNEL SELECTION DATA CHANNEL OUTPUT FROM SDATA PIN IS SELECTED. (H = L CHANNEL DATA, L = R CHANNEL DATA)
SCLK	; SERIAL DATA OUTPUT CLOCK
TST1~TST3	; TEST (CONNECT TO DGND)
ZEROL	; L CHANNEL ZERO LEVEL INPUT
ZEROR	; R CHANNEL ZERO LEVEL INPUT

OUTPUT

ACLKA	; ANALOG SYSTEM CLOCK (CONNECT TO DCLKA PIN.)
DCAL	; DIGITAL CALIBRATION
SDATA	; SERIAL DATA OUTPUT DATA IS OUTPUT IN ORDER FROM MSB IN 2ND COMPLEMENT.
VREF	; REFERENCE VOLTAGE SUPPLY OF –3.6V

CX23065A (SONY)

N-MOS PHASE COMPARATOR WITH INVERSION AMPLIFIER
– PRINTED SIDE VIEW –

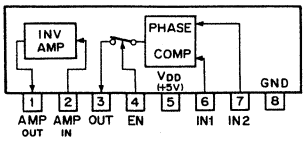

EN	OUT
1	ACTIVE
0	HIGH IMPEDANCE

1; HIGH LEVEL
0; LOW LEVEL

TIMING CHART

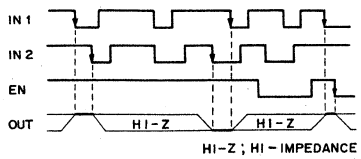

HI-Z ; HI – IMPEDANCE

CXA1418N (SONY)

SENSOR AMPLIFIER FOR R-DAT
– TOP VIEW –

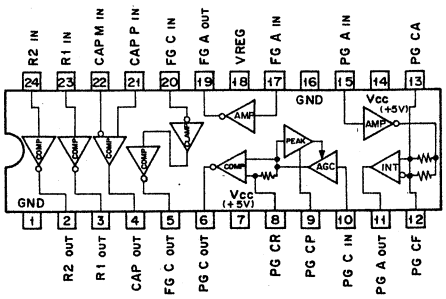

CXA1127AM (SONY) FLAT PACKAGE

CAPSTAN MOTOR DRIVER
– TOP VIEW –

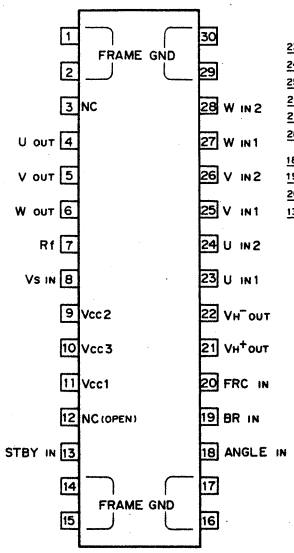

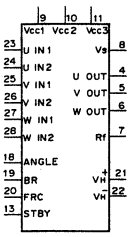

INPUT
BR : MOTOR BRAKE (H : STOP, L : PLAY)
FRC : FWD/REV CONTROL (H : FWD, L : REV)
STBY : STAND-BY (GND : POWER OFF)
U IN1, 2 : U PHASE INPUTS
V IN1, 2 : V PHASE INPUTS
Vs : MOTOR INPUT VOLTAGE (Vs < Vcc2)
W IN1, 2 : W PHASE INPUTS

OUTPUT
U OUT : U PHASE OUTPUT
V OUT : V PHASE OUTPUT
V_H^+, V_H^- : HALL BIAS CURRENT
W OUT : W PHASE OUTPUT

OTHERS
Rf : GND FOR OUTPUT TRANSISTOR
Rs : GND FOR OUTPUT DRIVER

NOTE :

Vcc1	+4 to +7V	OPEN
Vcc2	+4 to +12V	+6 to +12V
Vcc3	short to Vcc1	short to Vcc2
Vs	Vs<Vcc2	Vs<Vcc2

INPUT U	INPUT V	INPUT W	FRC	FUNCTION
H	H	L	0	W→V PHASE
			1	V→W PHASE
H	L	L	0	W→U PHASE
			1	U→W PHASE
L	L	H	0	V→W PHASE
			1	W→V PHASE
L	H	L	0	U→V PHASE
			1	V→U PHASE
H	L	H	0	V→U PHASE
			1	U→V PHASE
L	H	H	0	U→W PHASE
			1	W→U PHASE

H : HIGH LEVEL
L : LOW LEVEL
1 : 2.0 to Vcc2
0 : 0 to 0.3V

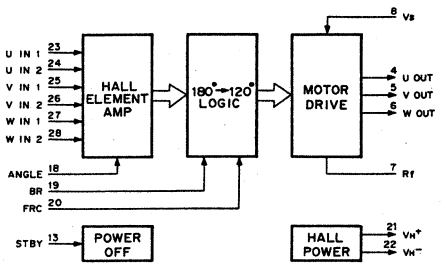

CXA1364R (SONY)

REC/PB AMP FOR R-DAT
– TOP VIEW –

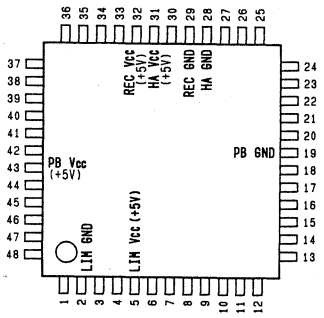

(Vcc = + 5V)

PIN No.	I/O	SIGNAL	PIN No.	I/O	SIGANL	PIN No.	I/O	SIGNAL	PIN No.	I/O	SIGNAL
1	O	LIM OUT	13	O	PLT OUT	25	–	B PC	37	O	A HA OUT
2	–	LIM GND	14	I	GCA CTL	26	I	B HA IN	38	–	SAG TC
3	I	MOD1 IN	15	–	EQ PHASE	27	O	B RA OUT	39	–	A R PCM
4	I	MOD2 IN	16	–	EQ Q	28	–	HA GND	40	–	B R PCM
5	–	LIM Vcc	17	–	EQ HIGH	29	–	REC GND	41	–	A R PLT
6	O	ENV OUT	18	–	EQ LOW	30	I	REC BIAS	42	–	B R PLT
7	–	ENV COMP	19	–	PB GND	31	–	HA Vcc	43	–	PB Vcc
8	–	ENV PEAK	20	I	EQ IN	32	–	REC Vcc	44	I	REDT IN
9	I	LIM IN	21	O	SWA OUT	33	O	A RA OUT	45	I	REPB IN
10	O	EQ OUT	22	O	V REG	34	I	A HA IN	46	I	PIPC IN
11	O	P EV OUT	23	O	B HA OUT	35	–	A PC	47	I	SWP IN
12	I	P ENV IN	24	–	B LPC	36	–	A LPC	48	I	NRM HLF

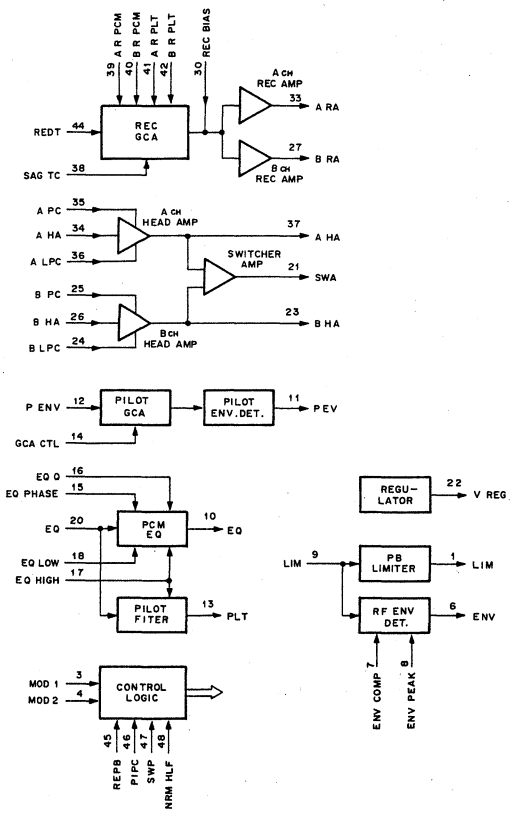

INPUT

A HA IN	; Ach HEAD AMPLIFIER INPUT
B HA IN	; Bch HEAD AMPLIFIER INPUT
EQ IN	; PCM EQ INPUT
GCA CTL	; PILOT GCA GAIN CONTROL VOLTAGE INPUT
LIM IN	; PB LIMITER AND RF ENVELOPE DETECTOR INPUT
MOD1 IN, MOD2 IN	; OPERATION MODE SWITCHING LOGIC INPUT
NRM HLF	; NORMAL/HALF SPEED SWITCHING SIGNAL INPUT
P ENV IN	; PILOT GCA INPUT
PIPC IN	; PCM/PILOT REC AREA SWITCHING SIGNAL INPUT
REC BIAS	; REC FINAL STAGE CURRENT AMPLIFIER INPUT
REDT IN	; REC SIGNAL INPUT
REPB IN	; REC/PB SWITCHING SIGNAL INPUT
SWP IN	; A/B SWITCHING SIGNAL INPUT

OUTPUT

A HA OUT	; Ach HEAD AMPLIFIER OUTPUT
A RA OUT	; Ach REC AMPLIFIER OUTPUT
B HA OUT	; Bch HEAD AMPLIFIER OUTPUT
B RA OUT	; Bch REC AMPLIFIER OUTPUT
ENV OUT	; RF ENVELOPE DETECTOR OUTPUT
EQ OUT	; PCM EQUALIZER OUTPUT
LIM OUT	; PB LIMITER OUTPUT
P EV OUT	; PILOT ENVELOPE OUTPUT
PLT OUT	; PILOT FILTER OUTPUT
SWA OUT	; SWITCH AMPLIFIER OUTPUT
V REG	; REGULATOR OUTPUT

OTHERS

A LPC	; CONNECTION PIN FOR SMOOTHING CAPACITOR OF Ach HEAD AMPLIFIER DC SERVO
A PC	; CONNECTION PIN FOR EMITTER BYPASS CAPACITOR OF Ach HEAD AMPLIFIER FIRST STAGE GROUNDED EMITTER TRANSISTOR
A R PCM	; CONNECTION PIN FOR RESISTOR DETERMINING Ach REC CURRENT
A R PLT	; CONNECTION PIN FOR RESISTOR DETERMINING, ALONG WITH RESISTOR OF PIN 39, Ach PILOT SIGNAL REC CURRENT
B LPC	; CONNECTION PIN FOR DC SMOOTHING CAPACITOR OF Bch HEAD AMPLIFIER DC SERVO
B PC	; CONNECTION PIN FOR EMITTER BYPASS CAPACITOR OF Bch HEAD AMPLIFIER FIRST STAGE GROUNDED EMITTER TRANSISTOR
B R PCM	; CONNECTION PIN FOR RESISTOR DETERMINING Bch REC CURRENT
B R PLT	; CONNECTION PIN FOR RESISTOR DETERMINING, ALONG WITH RESISTOR OF PIN 40, Bch PILOT SIGNAL REC CURRENT
ENV COMP	; FOR CONTROLLING RF ENVELOPE THRESHOLD VOLTAGE
ENV PEAK	; CONNECTION PIN OF THE CAPACITOR FOR RF PEAK HOLD
EQ HIGH	; RESISTOR OR CURRENT SOURCE IS CONNECTED FOR DETERMINING PCM EQ HIGH BAND PEAK FREQUENCY AND PILOT FILTER CUT OFF FREQUENCY.
EQ LOW	; RESISTOR OR CURRENT SOURCE IS CONNECTED FOR DETERMINING PCM EQ LOW BAND CHARACTERISTIC.
EQ PHASE	; RESISTOR OR CURRENT SOURCE IS CONNECTED FOR DETERMINING PCM EQ PHASE CHARACTERISTIC.
EQ Q	; RESISTOR OR CURRENT SOURCE IS CONNECTED FOR DETERMINING PCM EQ HIGH BAND PEAK GAIN.
SAG TC	; CONNECTION PIN FOR CAPACITOR CORRECTING THE REC WAVEFORM SAG

CXD1102Q (SONY) FLAT PACKAGE

C-MOS EL DISPLAY UNIT CONTROLLER

– TOP VIEW –

PIN NO.	I/O	SYMBOL	PIN NO.	I/O	SYMBOL	PIN NO.	I/O	SYMBOL	PIN NO.	I/O	SYMBOL	PIN NO.	I/O	SYMBOL
1	I/O	AD04	17	O	MA02	33		VDD	49	I/O	MD01	65	I	RAS
2		GND	18	O	MA03	34	I/O	MD14	50	I/O	MD00	66	I	HSYN
3		NC	19	O	MA04	35	I/O	MD13	51	I	TEST1	67	I	VSYN
4	I/O	AD03	20	O	MA05	36	I/O	MD12	52		GND	68	I	BLK
5	I/O	AD02	21	O	MA06	37	I/O	MD11	53	I	CK	69	I/O	AD15
6	I/O	AD01	22		NC	38	I/O	MD10	54	I	TEST2	70	I/O	AD14
7	I/O	AD00	23		GND	39	I/O	MD09	55	I	VDC2	71	I/O	AD13
8	I	WPI 1	24	O	MA07	40	I/O	MD08	56	I	VDC1	72	I/O	AD12
9	I	WPI 2	25	O	MA08	41	I/O	MD07	57	I	VDC0	73		VDD
10	O	WPO	26	O	MA09	42		GND	58	O	VD	74	I/O	AD11
11	O	MWE	27	O	MA10	43		NC	59	O	HD	75	I/O	AD10
12		GND	28	O	MA11	44	I/O	MD06	60	O	DIN	76	I/O	AD09
13	O	MCE	29	O	MA12	45	I/O	MD05	61	I	DBIN	77	I/O	AD08
14	O	MOE	30	O	MA13	46	I/O	MD04	62		NC	78	I/O	AD07
15	O	MA00	31	O	MA14	47	I/O	MD03	63		GND	79	I/O	AD06
16	O	MA01	32	I/O	MA15	48	I/O	MD02	64	O	CKX2	80	I/O	AD05

```
MA00-MA14;   MEMORY ADDRESS OUTPUTS
MD00-MA15;   MEMORY DATA INPUTS/OUTPUTS
AD00-AD15;   MEMORY ADDRESS INPUTS/
             MEMORY DATA INPUTS/OUTPUTS

CKX2;        1/2 CK OUTPUT
RAS;         READ ENABLE INPUT
DBIN;        WRITE ENABLE INPUT
HSYN;        H COUNTER START PULSE INPUT
VSYN;        V COUNTER START PULSE INPUT

MCE;         MEMORY CHIP ENABLE INPUT
MOE;         MEMORY OUTPUT ENABLE INPUT
MWE;         MEMORY WRITE ENABLE INPUT
WPO;         WRITE MODE OUTPUT
WPI1, WPI2;  DELAYED WPO INPUTS

DIN;         DISPLAY DATA OUTPUT
HD;          DISPLAY H SYNC OUT
VD;          DISPLAY V SYNC OUT
```

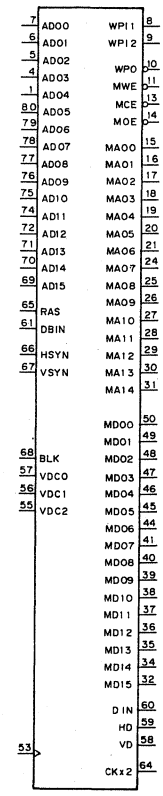

TIMING CHART (MEMORY CONTROL)

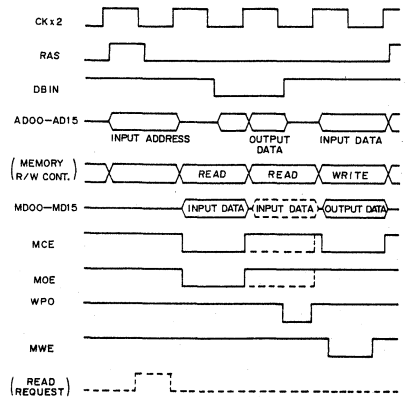

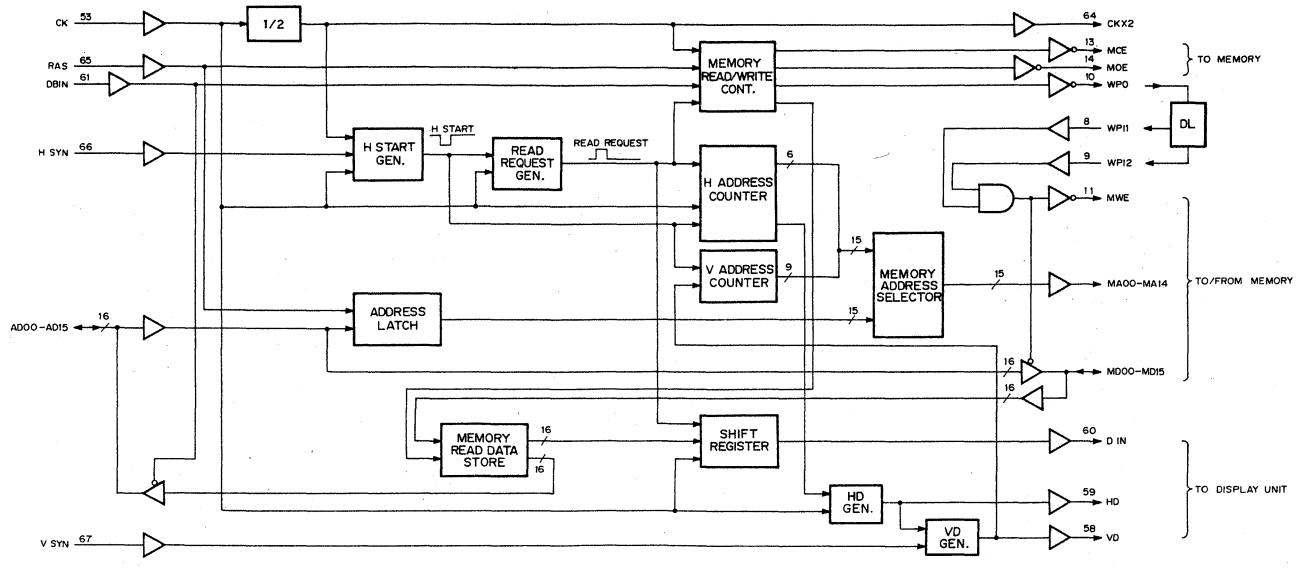

TIMING CHART (DISPLAY DATA READ SEQUENSE)

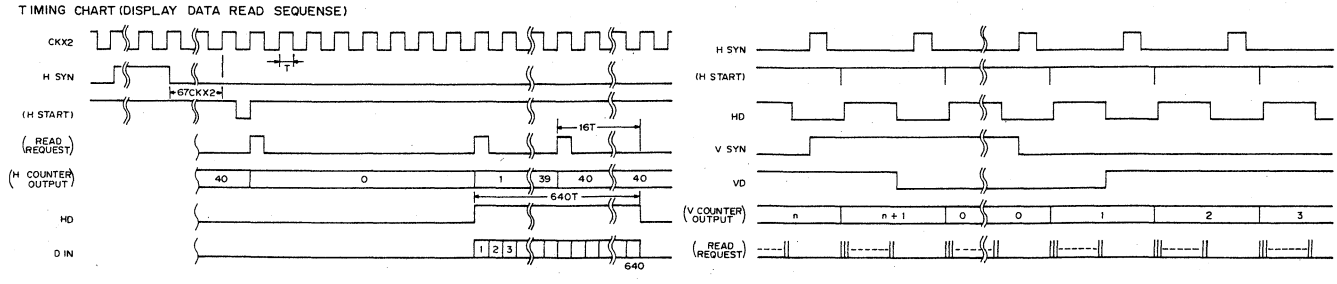

CXD2605R (SONY) FLAT PACKAGE

C-MOS SIGNAL PROCESSOR FOR R-DAT
– TOP VIEW –

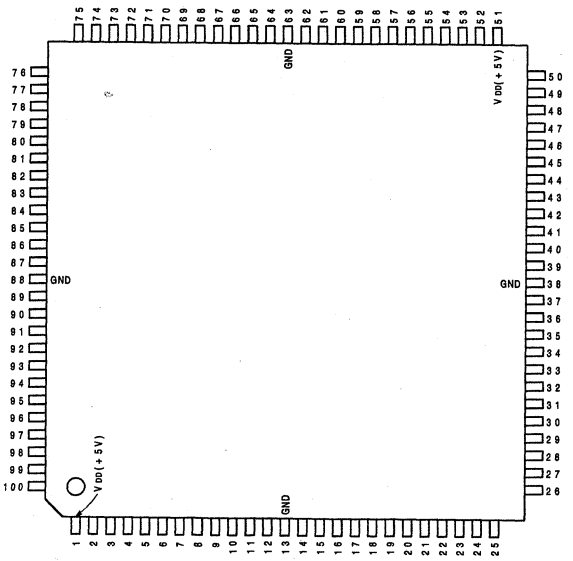

(VDD = +5V)

PIN No.	I/O	SIGNAL	PIN No.	I/O	SIGNAL	PIN No.	I/O	SIGNAL	PIN No.	I/O	SIGNAL
1	–	VDD	26	O	CCLK	51	–	VDD	76	I	DADO
2	O	A10	27	I	MUTE	52	O	TX	77	O	ADDI
3	O	A11	28	O	MUTM	53	I	TST6	78	I	ADDN
4	O	A12	29	O	UNLK	54	I/O	EXSY	79	I	ERRI
5	O	A13	30	I	RFCT	55	I/O	EXSN	80	O	ERRF
6	O	A14	31	O	SYMN	56	I/O	F128	81	O	MNTG
7	O	XWE	32	I	TST5	57	O	F256	82	I/O	D7
8	O	XOE	33	O	PLCK	58	O	F512	83	I/O	D6
9	O	XEAN	34	I	TST2	59	I	ADLF	84	I/O	D5
10	I	TST1	35	I	RFDT	60	I	DALF	85	I/O	D4
11	O	XT1O	36	I	XCS	61	O	XT2O	86	I/O	D3
12	I	XT1I	37	I	SWP	62	I	XT2I	87	I/O	D2
13	–	GND	38	–	GND	63	–	GND	88	–	GND
14	I	XRST	39	O	PIPC	64	O	XT3O	89	I/O	D1
15	O	CLKO	40	O	REPB	65	I	XT3I	90	I/O	D0
16	O	MINT	41	O	REDT	66	I	FSEN	91	O	A00
17	I	ATSY	42	I	TST4	67	O	LR03	92	O	A01
18	O	MCLK	43	O	PDO	68	O	LR02	93	O	A02
19	O	DREF	44	I	SELC	69	O	LR01	94	O	A03
20	O	SBPM	45	I	MUTA	70	I/O	LRCK	95	O	A04
21	I	EXCK	46	I	PLCO	71	O	WCK	96	O	A05
22	I	SDSI	47	O	PLVR	72	O	XBCK	97	O	A06
23	O	SDSO	48	O	PLRF	73	I/O	BCK	98	O	A07
24	O	SBSY	49	I	MSSL	74	I	ADDT	99	O	A08
25	O	RFPL	50	I	RX	75	O	DADT	100	O	A09

INPUT

ADDN ;AUDIO SIGNAL FOR AES/EBU DIGITAL IN. NORMALLY CONNECTED TO ADDI
ADDT ;SERIAL DATA FROM ADC. SYNCHRONIZES WITH BCK
ADLF ;LSB-MSB FIRST SELECTION FOR ADDT/ADDN/ADDI SIGNALS. LSB FIRST IS SELECTED WHEN ' H'
ATSY ;ATF SYNC SIGNAL. SYNCHRONIZES WHEN ' H'
DALF ;LSB/MSB FIRST SELECTION FOR DADT/DADO SIGNALS. LSB FIRST WHEN ' H'
DADO ;AUDIO SIGNAL FOR AES/EBU DIGITAL OUT. NORMALLY CONNECTED TO DADT
ERRI ;VALIDITY FLAG FOR AES/EBU DIGITAL OUT. NORMALLY CONNECTED TO ERRF
EXCK ;CLOCK FOR DATA TRANSMISSION WITH μCOM
FSEN ;F128,BCK,LRCK INPUT/OUTPUT SELECTION. OUTPUT WHEN ' H'
MSSL ;MASTER/SLAVE SELECTION. MASTER WHEN ' H'
MUTA ;MUTES REC MONITOR SOUNDS AS WELL. 49.152MHz WHEN ' H'
MUTE ;DOES NOT MUTE REC MONITOR SOUNDS. MUTES WHEN ' H'
PLCO ;RX-ANALOG PLL EXTERNAL VCO CLOCK INPUT
RFCT ;RF SIGNAL CUT CONTROL. CUTS WHEN ' H'
RFDT ;PLAYBACK RF SIGNAL
RX ;AES/EBU DIGITAL IN SIGNAL
SDSI ;SERIAL DATA INPUT FROM μCOM
SDSO ;SERIAL DATA OUTPUT TO μCOM
SELC ;CRYSTAL 3 LIQUID C
SWP ;PLAYBACK RF SIGNAL DISCRIMINATION. A CH TRACK WHEN ' L' AND B CH TRACK WHEN ' H'
TST1 ;TEST PIN.FIXED AT ' L'
TST2 ;TEST PIN.FIXED AT ' L'
TST4 ;TEST PIN.FIXED AT ' L'
TST5 ;TEST PIN.FIXED AT ' H'
TST6 ;TEST PIN.FIXED AT ' H'
XCS ;CHIP SELECT FOR DATA TRANSMISSION WITH μCOM. TRANSMISSION PERMITTED WHEN ' L'
XRST ;RESET INPUT. RESETS WHEN ' L'
XT1I ;CRYSTAL OSCILLATION CIRCUIT 1 INPUT
XT2I ;CRYSTAL OSCILLATION CIRCUIT 2 INPUT
XT3I ;CRYSTAL OSCILLATION CIRCUIT 3 INPUT

OUTPUT

A00-A14 ;EXTERNAL RAM ADDRESS OUTPUT
ADDI ;AUDIO SIGANL FOR AES/EBU DIGITAL IN
CCLK ;9.8304MHz/12.288MHz
CLKO ;SYSTEM CLOCK OUTPUT(4.9152MHz/8.192MHz)
DADT ;SERIAL DATA TO DAC
DREF ;SIGNAL WITH SBSY PERIOD AND 50% DUTY
ERRF ;DADT DATA COMPENSATION DISCRIMINATION SIGNAL. COMPENSATION DATA WHEN ' H'
F256 ;256×fs.512×fs WHEN DOUBLE SPEED
F512 ;512×fs.DOES NOT CHANGE EVEN WHEN DOUBLE SPEED
LR01 ;1SBCK DELAY SIGNAL OF LRCK
LR02 ;16BCK DELAY SIGNAL OF LRCK/LRCK CLOCK OF RX-PLL
LR03 ;LR02 REVERSAL SIGNAL
MCLK ;CHANNEL CLOCK OUTPUT
MINT ;SIGNAL DETECTING INTERVAL BETWEEN PROGRAMS(CD)(AT DIN)/RX-PLL BCK CLOCK
MNTG ;D0 to D7 CORRECTION MONITOR DATA DISCRIMINATION SIGNAL. VALID WHEN ' H'
MUTM ;MUTE MONITOR. MUTES WHEN ' H'
PDO ;PHASE COMPARATOR OUTPUT FOR RX-ANALOG PLL
PIPC ;ATF PILOT SIGNAL DISCRIMINATION OF RECORDING SIGNALS. PILOT SIGNAL WHEN ' H'
PLCK ;RF-PLL CLOCK/RX-PLL F128 CLOCK
PLRF ;RX-ANALOG PLL PHASE COMPARISON SIGNAL(2fs RX SYNC DETECTION SIGNAL)
PLVR ;RX-ANALOG PLL PHASE COMPARISON SIGNAL(2fs FROM THE PLL CLOCK)
REDT ;RECORDING SIGNAL
REPB ;REC-PB DISCRIMINATION SIGNAL. REC WHEN ' H'
RFPL ;1/5880 FREQUENCY DIVISION OF PLL CLOCK
SBPM ;SIGNAL PERMITTING PACK TRANSMISSION WITH μCOM/RX-PLL F256 CLOCK
SBSY ;FRAME SYNC SIGNAL OUTPUT FOR DATA TRANSMISSION WITH μCOM
SYMN ;C1 CHECK RESULTS CORRESPONDING TO RF. ' OK' WHEN ' H'
TX ;AES/EBU DIGITAL OUT SIGNAL
UNLK ;RX-PLL LOCK MONITOR SIGNAL. LOCKS WHEN ' L'
WCK ;2×fs,4×fs WHEN DOUBLE SPEED
XBCK ;BCK REVERSAL SIGNAL
XEAN ;EXTERNAL ADDRESSING ENABLE SIGNAL OUTPUT
XOE ;EXTERNAL RAM OUTPUT ENABLE SIGNAL OUTPUT
XT1O ;CRYSTAL OSCILLATION CIRCUIT 1 OUTPUT(9.408MHz/18.816MHz/37.632MHz)
XT2O ;CRYSTAL OSCILLATION CIRCUIT 2 OUTPUT(22.5792MHz)
XT3O ;CRYSTAL OSCILLATION CIRCUIT 3 OUTPUT(24.576MHz/49.152MHz)
XWE ;EXTERNAL RAM WRITE ENABLE SIGNAL OUTPUT

INPUT/OUTPUT

BCK ;64×fs 128×fs WHEN DOUBLE SPEED
D0-D7 ;EXTERNAL RAM DATA
EXSN ;EXTERNAL SYNC SIGNAL. NORMALLY CONNECTED TO EXSY
EXSY ;EXTERNAL SYNC SIGNAL. NORMALLY CONNECTED TO EXSN(×1SP:100/3Hz)
F128 ;128×fs.256×fs WHEN DOUBLE SPEED
LRCK ;fs,2×fs WHEN DOUBLE SPEED

CXD2704Q (SONY) FLAT PACKAGE

C-MOS DIGITAL AUDIO SIGNAL PROCESSOR
– TOP VIEW –

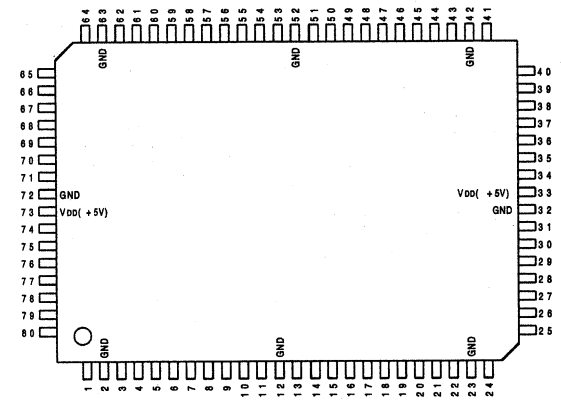

(VDD = +5V)

PIN No.	I/O	SIGNAL	PIN No.	I/O	SIGNAL	PIN No.	I/O	SIGNAL	PIN No.	I/O	SIGNAL
1	I	TSTI	21	O	HD7	41	-	NC	61	-	NC
2	-	GND	22	O	HD8	42	-	GND	62	-	NC
3	I	TEST	23	-	GND	43	-	NC	63	-	GND
4	I	PSSL	24	O	HD9	44	-	NC	64	-	NC
5	I	HA0	25	O	HD10	45	O	A0	65	-	NC
6	I	HA1	26	O	HD11	46	O	A1	66	-	NC
7	I	HA2	27	I	SIA	47	O	A2	67	-	NC
8	I	HA3	28	O	SOA	48	O	A3	68	O	XRAS
9	I	XRD	29	I	BCK	49	O	A4	69	O	XWSO
10	I	MCK1	30	I	LRCK	50	O	A5	70	I/O	DIO
11	I	MCK2	31	O	OVR	51	O	A6	71	O	XCAS
12	-	GND	32	-	GND	52	-	GND	72	-	GND
13	I	H16B	33	-	VDD	53	O	A7	73	-	VDD
14	O	HD0	34	I	XCLR	54	O	A8	74	I	SDTI
15	O	HD1	35	I	SIB	55	O	A9	75	I	SCK
16	O	HD2	36	O	SOB	56	O	A10	76	I	XSLD
17	O	HD3	37	O	HD12	57	I	TSTJ	77	O	XRDY
18	O	HD4	38	O	HD13	58	I	SBCK	78	O	SDTO
19	O	HD5	39	O	HD14	59	I	SLC	79	I	XCS
20	O	HD6	40	O	HD15	60	-	NC	80	-	NC

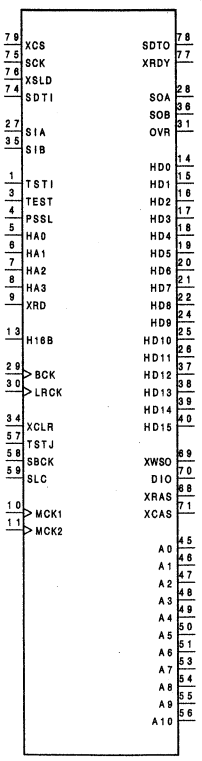

INPUT

BCK	;SERIAL DATA TRANSMISSION CLOCK
H16B	;TEST PIN. NORMALLY FIXED AT ' L'
HA0-HA3	;TEST PIN. NORMALLY FIXED AT ' L'
LRCK	;SERIAL I/O SAMPLING RATE CLOCK INPUT
MCK1	;MASTER CLOCK INPUT 1
MCK2	;MASTER CLOCK INPUT 2
PSSL	;TEST PIN. NORMALLY FIXED AT ' L'
SBCK	;TEST PIN. NORMALLY FIXED AT ' L'
SCK	;MICROPROCESSOR INTERFACE SERIAL TRANSMISSION CLOCK
SDTI	;MICROPROCESSOR INTERFACE SERIAL DATA INPUT
SIA	;2-CHANNEL SERIAL DATA INPUT A
SIB	;2-CHANNEL SERIAL DATA INPUT B
SLC	;TEST PIN. NORMALLY FIXED AT ' L'
TEST	;TEST PIN. NORMALLY FIXED AT ' L'
TSTI	;TEST PIN. NORMALLY FIXED AT ' L'
TSTJ	;TEST PIN. NORMALLY FIXED AT ' L'
XCLR	;TEST PIN. NORMALLY FIXED AT ' H'
XCS	;MICROPROCESSOR INTERFACE CHIP SELECT
XRD	;TEST PIN. NORMALLY FIXED AT ' L'
XSLD	;MICROPROCESSOR INTERFACE SERIAL DATA INPUT LATCH

OUTPUT

A0-A10	;EXTERNAL DRAM ADDRESS OUTPUT A0-A10
HD0-HD15	;TEST PIN. NORMALLY FIXED AT ' H'
OVR	;CALCULATOR OVERFLOW DETECTION OUTPUT
SDTO	;MICROPROCESSOR INTERFACE SERIAL DATA OUTPUT
SOA	;2-CHANNEL SERIAL DATA OUTPUT A
SOB	;2-CHANNEL SERIAL DATA OUTPUT B
XCAS	;EXTERNAL DRAM COLUMN ADDRESS STROBE OUTPUT
XRAS	;EXTERNAL DRAM LOW ADDRESS STROBE OUTPUT
XRDY	;MICROPROCESSOR INTERFACE TRANSMISSION READY
XWSO	;EXTERNAL DRAM READ/WRITE OUTPUT

INPUT/OUTPUT

DIO	;EXTERNAL DRAM DATA INPUT/OUTPUT

CXK581100TM-10LL (SONY) FLAT PACKAGE

C-MOS 1M(131072 x 8)-BIT STATIC RAM
– TOP VIEW –

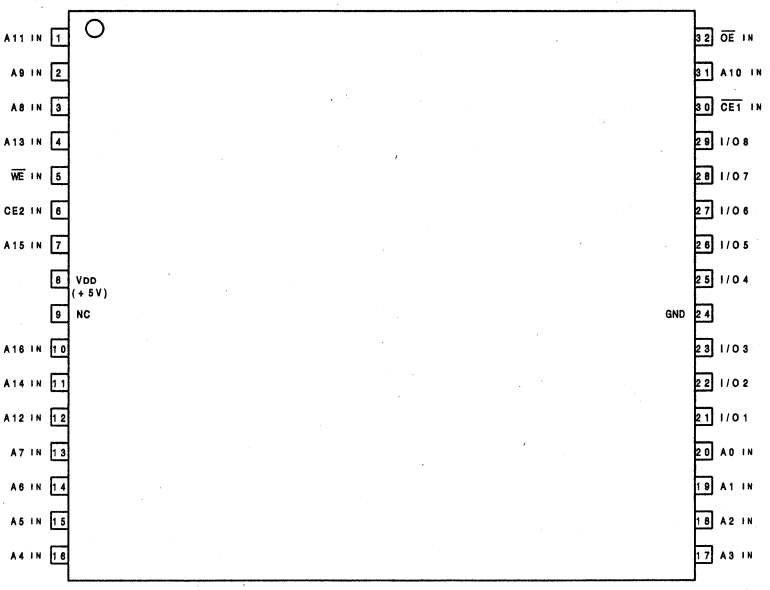

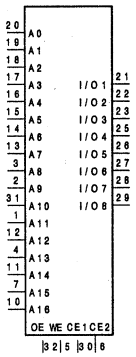

A0-A16 ;ADDRESS INPUTS
CE1,CE2 ;CHIP ENABLE INPUT
I/O1-I/O8 ;DATA INPUTS/OUTPUTS
OE ;OUTPUT ENABLE INPUT
WE ;WRITE ENABLE INPUT

CE1	CE2	OE	WE	MODE	I/O TERMINAL
1	x	x	x	NOT SELECT	HIGH IMPEDANCE
x	0	x	x	NOT SELECT	HIGH IMPEDANCE
0	1	1	1	OUTPUT DISABLE	HIGH IMPEDANCE
0	1	0	1	READ	OUTPUT DATA
0	1	x	0	WRITE	INPUT DATA

0 ;LOW LEVEL
1 ;HIGH LEVEL
x ;DON' T CARE

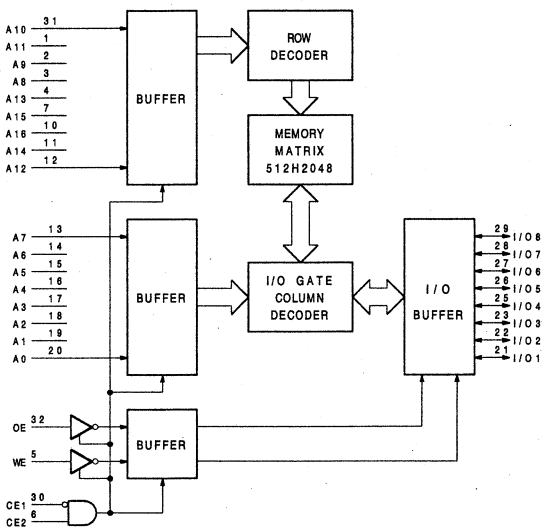

CXD8864Q (SONY) FLAT PACKAGE

C-MOS SOUND MEMORY CONTROLLER FOR R-DAT
– TOP VIEW –

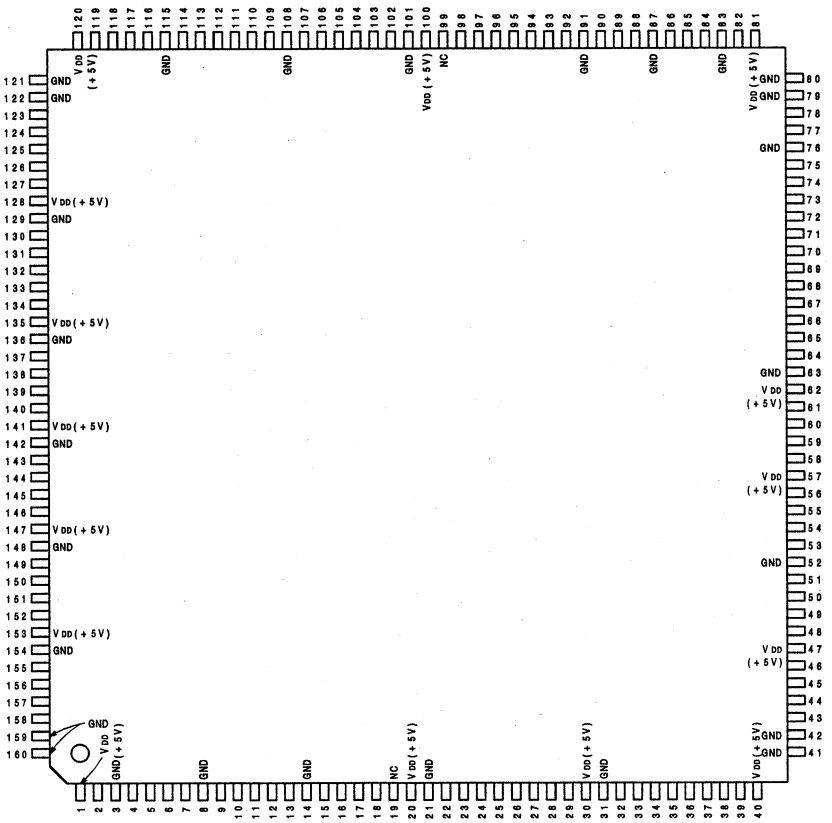

(VDD = +5V)

PIN No.	I/O	SIGNAL	PIN No.	I/O	SIGNAL	PIN No.	I/O	SIGNAL	PIN No.	I/O	SIGNAL
1	–	VDD	41	–	GND	81	–	VDD	121	–	GND
2	I	CPUCK	42	–	GND	82	I	F256	122	–	GND
3	–	GND	43	I/O	DB15	83	–	GND	123	O	RA9
4	I	$\overline{\text{RESET}}$	44	I/O	DB14	84	I	SBSY	124	O	RA8
5	O	READY	45	I/O	DB13	85	O	FS	125	O	RA7
6	I	$\overline{\text{I/ORD}}$	46	I/O	DB12	86	O	FS64	126	O	RA6
7	I	$\overline{\text{I/OWR}}$	47	–	VDD	87	–	GND	127	O	RA5
8	–	GND	48	I/O	DB11	88	I	SDI	128	–	VDD
9	I	$\overline{\text{MRD}}$	49	I/O	DB10	89	O	SDO1	129	–	GND
10	I	MWR/	50	I/O	DB9	90	O	SDO2	130	O	RA4
11	I	$\overline{\text{I/OEN}}$	51	I/O	DB8	91	–	GND	131	O	RA3
12	I	$\overline{\text{MEMEN}}$	52	–	GND	92	I	$\overline{\text{EMU SEL}}$	132	O	RA2
13	I	DSIEN	53	I/O	DB7	93	I	EXTSDI	133	O	RA1
14	–	GND	54	I/O	DB6	94	O	EXTXRDY	134	O	RA0
15	O	WRREQ	55	I/O	DB5	95	O	EXTSDO	135	–	VDD
16	I	$\overline{\text{WRACK}}$	56	I/O	DB4	96	O	EXTXSLD	136	–	GND
17	O	$\overline{\text{END}}$	57	–	VDD	97	O	EXTSCK	137	I/O	RDQ15
18	I	ENDRTN	58	I/O	DB3	98	I	NA2	138	I/O	RDQ14
19	–	NC	59	I/O	DB2	99	–	NC	139	I/O	RDQ13
20	–	VDD	60	I/O	DB1	100	–	VDD	140	I/O	RDQ12
21	–	GND	61	I/O	DB0	101	–	GND	141	–	VDD
22	I	AB15	62	–	VDD	102	I	NA1	142	–	GND
23	I	AB14	63	–	GND	103	I	NA0	143	I/O	RDQ11
24	I	AB13	64	O	WRFRM	104	O	$\overline{\text{DSP SEL2}}$	144	I/O	RDQ10
25	I	AB12	65	I	EXCK	105	O	$\overline{\text{DSP SEL1}}$	145	I/O	RDQ9
26	I	AB11	66	O	SDSO	106	O	$\overline{\text{DSP SEL0}}$	146	I/O	RDQ8
27	I	AB10	67	I	ERRF	107	I	PGMSDI	147	–	VDD
28	I	AB9	68	O	RDFRM	108	–	GND	148	–	GND
29	I	AB8	69	I	TEST3	109	O	PGMSCK	149	I/O	RDQ7
30	–	VDD	70	I	TEST2	110	O	PGMXSLD	150	I/O	RDQ6
31	–	GND	71	I	TEST1	111	O	PGMSDO	151	I/O	RDQ5
32	I	AB7	72	O	$\overline{\text{RDSTS}}$	112	I	$\overline{\text{XRDY2}}$	152	I/O	RDQ4
33	I	AB6	73	O	$\overline{\text{WRSTS}}$	113	I	$\overline{\text{XRDY1}}$	153	–	VDD
34	I	AB5	74	O	TRGB1	114	I	XRDY0	154	–	GND
35	I	AB4	75	O	TRGA1	115	–	GND	155	I/O	RDQ3
36	I	AB3	76	–	GND	116	O	$\overline{\text{RAS}}$	156	I/O	RDQ2
37	I	AB2	77	I	LRCKI	117	O	$\overline{\text{CAS}}$	157	I/O	RDQ1
38	I	AB1	78	I	DATFRM	118	O	$\overline{\text{WE}}$	158	I/O	RDQ0
39	I	AB0	79	–	GND	119	O	$\overline{\text{OE}}$	159	–	GND
40	–	VDD	80	–	GND	120	–	VDD	160	–	GND

INPUT

AB0–AB15	;CPU ADDRESS BUS From SYSTEM
CPUCK	;CPU CLOCK
DATFRM	;DAT FRAME INPUT SIGNAL
DSIEN	;DSP ENABLE SIGNAL
$\overline{\text{EMU SEL}}$	;EMULATOR SELECTION PIN
ENDRTN	;END RETURN SIGNAL
ERRF	;TEST SIGNAL(NOT USE)
EXCK	;TEST SIGNAL(NOT USE)
EXTSDI	;EXTERNAL SERIAL DATA INPUT
F256	;256 • Fs
I/O EN/	;I/O(AREA)ENABLE SIGNAL
I/O RD/	;I/O(AREA)READ SIGNAL
I/O WR/	;I/O(AREA)WRITE SIGNAL
LRCKI	;LR CLOCK INPUT SIGNAL
MEMEN/	;MEMORY(AREA)ENABLE SIGNAL
MRD/	;MEMORY(AREA)READ SIGNAL
MWR/	;MEMORY(AREA)WRITE SIGNAL
NA0,1,2	;DSP ADDRESS
PGMSDI	;SERIAL DATA INPUT
READY	;READY SIGNAL
RESET/	;RESET SIGNAL
SBSY	;TEST SIGNAL(NOT USE)
SDI	;SERIAL DATA INPUT
$\overline{\text{WRACK}}$	;WRITE ACKNOWLEDGE SIGNAL
$\overline{\text{XRDY 0, 1, 2}}$	;TRANSMISSION READY(SCK INPUT PROHIBITED)

OUTPUT

$\overline{\text{CAS}}$	;DRAM COLUMN ADDRESS STROBE OUTPUT SIGNAL
$\overline{\text{DSP SEL0, 1, 2}}$	;DSP CHIP SELECT PIN
END	;END SIGNAL
EXTSCK	;EXTERNAL SERIAL TRANSMISSION CLOCK
EXTSDO	;EXTERNAL SERIAL DATA INPUT
EXTXRDY	;EXTERNAL TRANSMISSION READY(SCK INPUT PROHIBITED)
EXTXSLD	;EXTERNAL SERIAL DATA INPUT LATCH
FS	;FS OUTPUT FOR DSP
FS64	;BIT SHIFT CLOCK OUTPUT FOR DSP
$\overline{\text{OE}}$	;DRAM OUTPUT ENABLE SIGNAL OUTPUT
PGMSCK	;SERIAL TRANSMISSION CLOCK
PGMSDO	;SERIAL DATA OUTPUT
PGMXSLD	;SERIAL DATA INPUT LATCH
RA0–RA9	;ADDRESS BUS to DRAM
$\overline{\text{RAS}}$	;DRAM LOW ADDRESS STROBE OUTPUT SIGNAL 2
RDFRM	;SIGNAL OUTPUT FOR MEMORY READ INTERRUPTION
$\overline{\text{RDSTS}}$	;LED OUTPUT FOR DRAM WRITE MONITOR
SDO1,2	;SERIAL DATA OUTPUT 1,2
SDSO	;TEST SIGNAL(NOT USE)
TRGA1	;TRGA OUTPUT SIGNAL
TRGB1	;TRGB OUTPUT SIGNAL
$\overline{\text{WE}}$	;DRAM WRITE ENABLE SIGNAL
WRFRM	;SIGNAL OUTPUT FOR MEMORY WRITE INTERRUPTION
WRREQ	;WRITE REQUEST SIGNAL
$\overline{\text{WRSTS}}$	;LED OUTPUT FOR DRAM READ MONITOR

INPUT/OUTPUT

DB0–DB15	;CPU DATA BUS From SYSTEM
RDQ0–RDQ15	;DATA BUS to DRAM

CXK58257ATM-70LL (SONY) FLAT PACKAGE

C-MOS 256k (32768 x 8)-BIT STATIC RAM
– TOP VIEW –

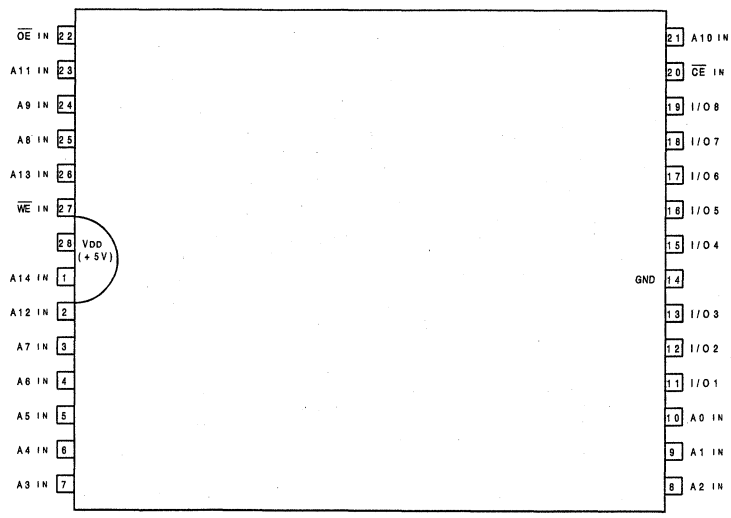

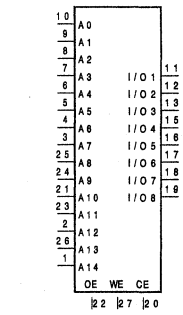

A0-A14 ;ADDRESS INPUTS
CE ;CHIP ENABLE INPUT
I/O1-I/O8 ;DATA INPUTS/OUTPUTS
OE ;OUTPUT ENABLE INPUT
WE ;WRITE ENABLE INPUT

CE	OE	WE	MODE	I/O TERMINAL
1	x	x	NOT SELECT	HIGH IMPEDANCE
0	1	1	OUTPUT DISABLE	HIGH IMPEDANCE
0	0	1	READ	OUTPUT DATA
0	x	0	WRITE	INPUT DATA

0 ;LOW LEVEL
1 ;HIGH LEVEL
x ;DON' T CARE

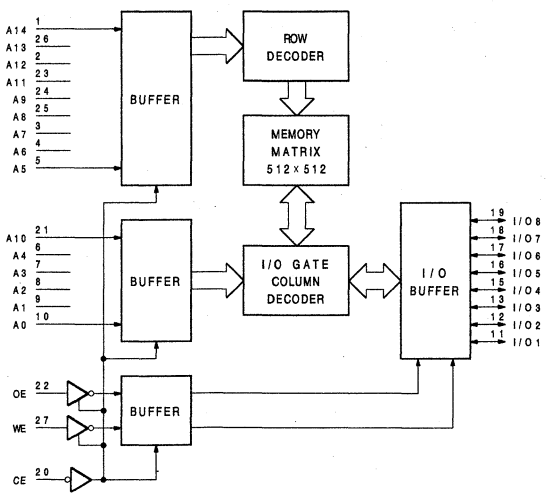

HD14053BFP (HITACHI) FLAT PACKAGE
MC14053BF (MOTOROLA) FLAT PACKAGE

C-MOS TRIPLE 2-CHANNEL ANALOG MULTIPLEXERS/DEMULTIPLEXERS
– TOP VIEW –

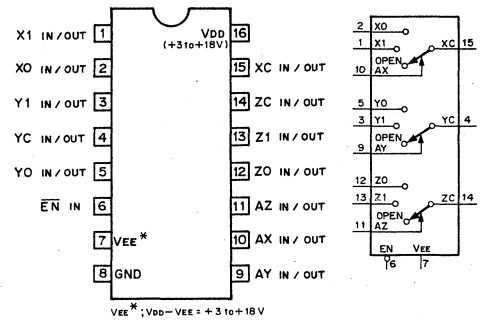

VEE* ; VDD − VEE = +3 to +18 V

CONT. INPUTS		ON
EN	A (X,Y,Z)	CHANNEL
0	0	0
0	1	1
1	X	OPEN

0 ; LOW LEVEL
1 ; HIGH LEVEL
X ; DON'T CARE.

LT1134CS (LINEAR TECH) FLAT PACKAGE

RS232C DRIVERS/RECEIVERS
– TOP VIEW –

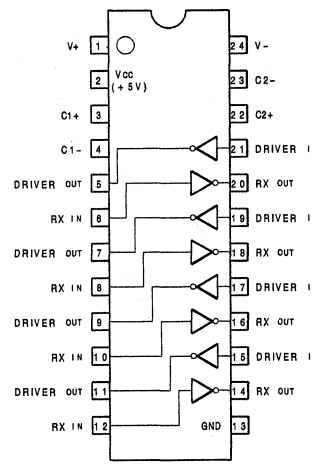

INPUT
DRIVER IN ;RS-232C DRIVER INPUTS
RX IN ;RECEIVER INPUTS
OUTPUT
DRIVER OUT ;RS-232C DRIVER OUTPUTS
RX OUT ;RECEIVER OUTPUTS TTL/CMOS VOLTAGE LEVELS

C1+,C1-,C2+,C2- ;EXTERNAL CAPACITORS
V+ ;POSITIVE SUPPLY(RS-232C DRIVERS)
V- ;NEGATIVE SUPPLY(RS-232C DRIVERS)

LB1638M (SANYO) FLAT PACKAGE

FORWARD/REVERCE MOTOR DRIVE
– TOP VIEW –

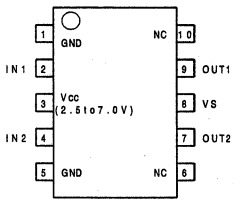

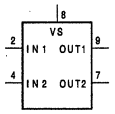

IN1	IN2	OUT1	OUT2	MODE
1	0	1	0	FORWARD
0	1	0	1	REVERCE
1	1	0	0	BRAKE
0	0	OFF	OFF	STAND BY

0:LOW LEVEL
1:HIGH LEVEL

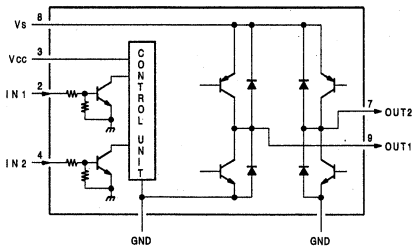

M6M80021FP (MITSUBISHI) FLAT PACKAGE

C-MOS 2k (128x16) BIT ERASABLE PROM
– TOP VIEW –

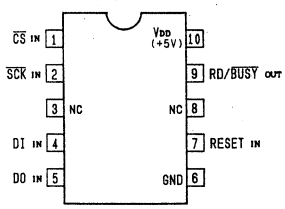

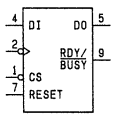

CS : CHIP SELECT INPUT
DI : DATA INPUT
DO : DATA OUTPUT
RDY/BUSY : BUSY OUTPUT
RESET : RESET INPUT
SCK : CLOCK INPUT

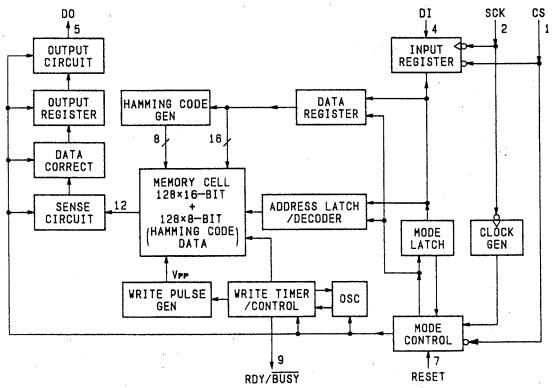

MB3771PF (FUJITSU) FLAT PACKAGE

2-WAY SUPPLY VOLTAGE SUPERVISOR
– TOP VIEW –

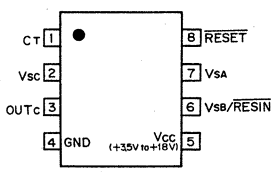

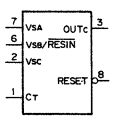

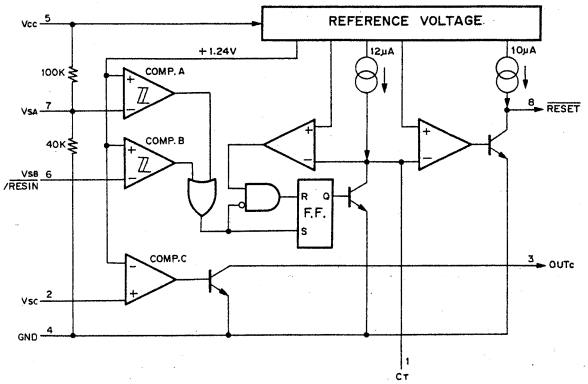

MB8421-90LPFQ (FUJITSU) (ACCESS TIME = 90nS) FLAT PACKAGE

C-MOS 16384 (2Kx8) BIT DUAL PORT STATIC RAM
– TOP VIEW –

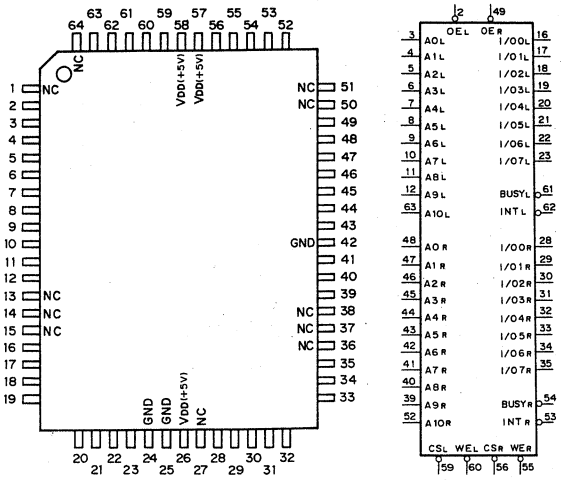

A0L – A10L, A0R – A10R : ADDRESS INPUTS
I/O0L – I/O7L, I/O0R – I/O7R : DATA INPUTS/OUTPUTS
CSL, CSR : CHIP SELECT INPUT
WEL, WER : WRITE ENABLE INPUT
OEL, OER : OUTPUT ENABLE INPUT
BUSYL, BUSYR : BUSY OUTPUT
INTL, INTR : INTERRUPT OUTPUT

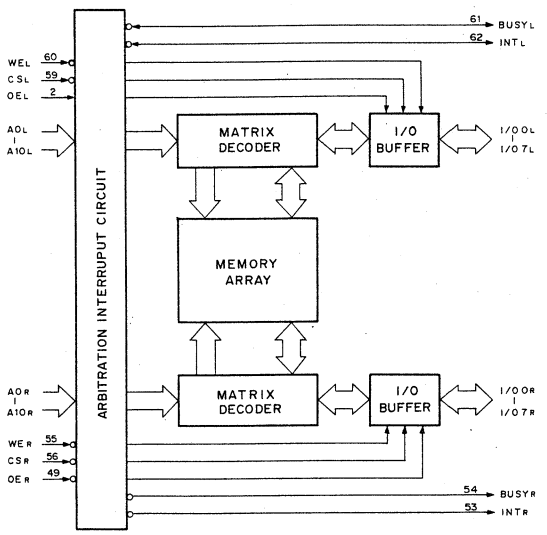

MB8431-90LPFQ (FUJITSU)

C-MOS 16K (2048x8)-BIT DUAL PORT STATIC RAM
– TOP VIEW –

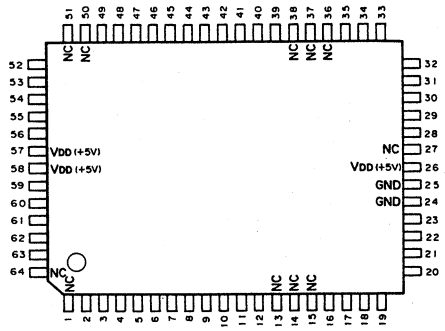

PIN No.	I/O	SIGNAL	PIN No.	I/O	SIGNAL	PIN No.	I/O	SIGNAL	PIN No.	I/O	SIGNAL
1	–	NC	17	I/O	I/O1L	33	I/O	I/O5R	49	I	OER
2	I	OEL	18	I/O	I/O2L	34	I/O	I/O6R	50	–	NC
3	I	A0L	19	I/O	I/O3L	35	I/O	I/O7R	51	–	NC
4	I	A1L	20	I/O	I/O4L	36	–	NC	52	I	A10R
5	I	A2L	21	I/O	I/O5L	37	–	NC	53	O	INTR
6	I	A3L	22	I/O	I/O6L	38	–	NC	54	I	BUSYR
7	I	A4L	23	I/O	I/O7L	39	I	A9R	55	I	WER
8	I	A5L	24	–	GND	40	I	A8R	56	I	CSR
9	I	A6L	25	–	GND	41	I	A7R	57	–	VDD
10	I	A7L	26	–	VDD	42	I	A6R	58	–	VDD
11	I	A8L	27	–	NC	43	I	A5R	59	I	CSL
12	I	A9L	28	I/O	I/O0R	44	I	A4R	60	I	WEL
13	–	NC	29	I/O	I/O1R	45	I	A3R	61	I	BUSYL
14	–	NC	30	I/O	I/O2R	46	I	A2R	62	O	INTL
15	–	NC	31	I/O	I/O3R	47	I	A1R	63	I	A10L
16	I/O	I/O0L	32	I/O	I/O4R	48	I	A0R	64	–	NC

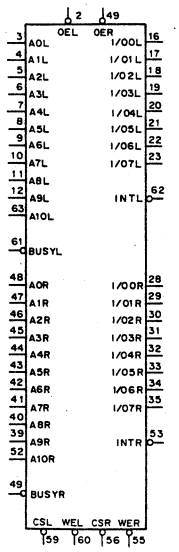

A0L – A10L,
A0R – A10R ; ADDRESS INPUTS
BUSYL, BUSYR ; BUSY INPUTS
CSL, CSR ; CHIP SELECT INPUTS
I/O0L – I/O10L,
I/O0R – I/O10R ; DATA INPUTS/OUTPUTS
INTL, INTR ; INTERRUPT OUTPUTS
OEL, OER ; OUTPUT ENABLE INPUTS
WEL, WER ; WRITE ENABLE INPUTS

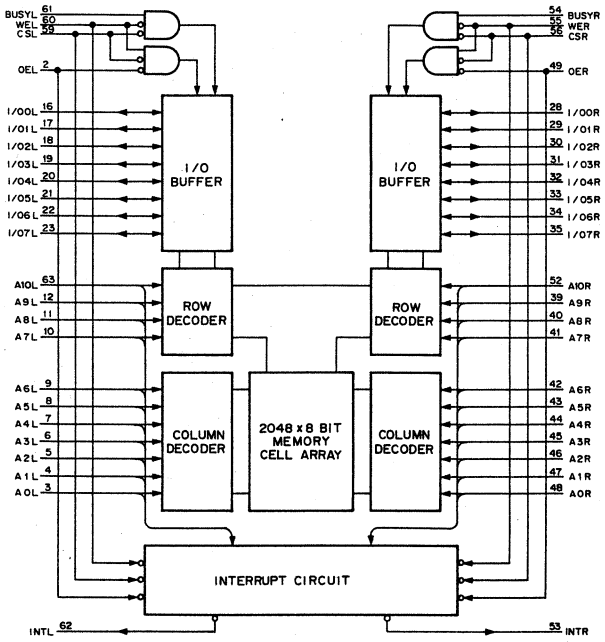

MB88346BPFV (FUJITSU) FLAT PACKAGE (SMALL)

C-MOS 8-BIT D/A CONVERTER
– TOP VIEW –

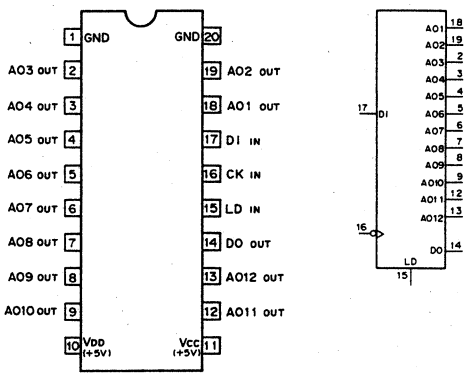

AO1 – AO12 : 8-BIT D/A OUTPUTS
CK : CLOCK INPUT
DI : SERIAL DATA INPUT
DO : DATA OUTPUT
LD : DATA LOAD CONTROL INPUT (H : LOAD)

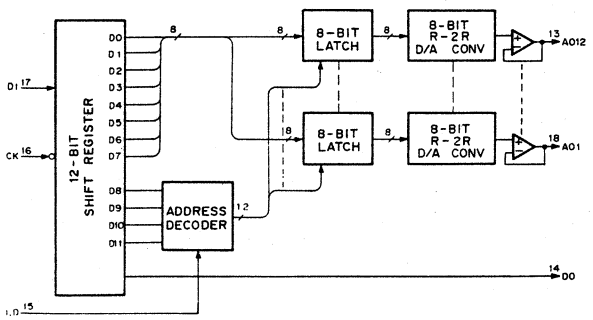

MSM5832RS

MICROPROCESSOR REAL TIME CLOCK
– TOP VIEW –

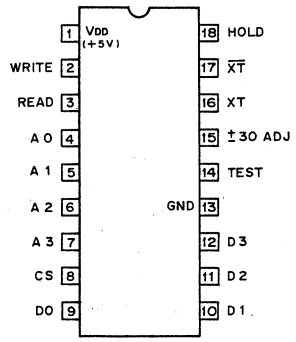

	ADDRESS INPUT				DATA I/O				COUNT
	A0	A1	A2	A3	D0	D1	D2	D3	
SEC.	0	0	0	0	*	*	*	*	0~9
	1	0	0	0	*	*	*		0~5
MIN.	0	1	0	0	*	*	*	*	0~9
	1	1	0	0	*	*	*		0~5
HOUR	0	0	1	0	*	*	*	*	0~9
	1	0	1	0	*	*	◎	◎	0~1 / 0~2
WEEK	0	1	1	0	*	*	*		0~6
DAY	1	1	1	0	*	*	*	*	0~9
	0	0	0	1	*	*	◎		0~3
MONTH	1	0	0	1	*	*	*	*	0~9
	0	1	0	1	*				0~1
YEAR	1	1	0	1	*	*	*	*	0~9
	0	0	1	1	*	*	*	*	0~9

Regarding Do to D3
*; 0 or 1
◎; Bit for AM/PM, 12H/24H, leap year (0 or 1)
BLANK; No Bit

NJL5803K-F10
– TOP VIEW –

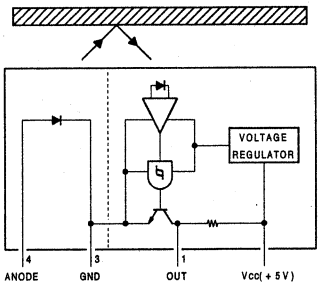

NJM2073M (JRC)

DUAL OPERATIONAL AMPLIFIER
– TOP VIEW –

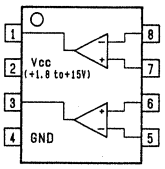

NJM4556M-A (JRC) FLAT PACKAGE

OPERATIONAL AMPLIFIER
(WIDE BAND, DECOMPENSATED)
– TOP VIEW –

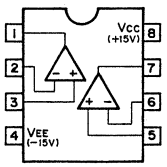

MSM6338MS-K (OKI)

C-MOS DIGITAL AUDIO PEAK LEVEL DETECTOR
– TOP VIEW –

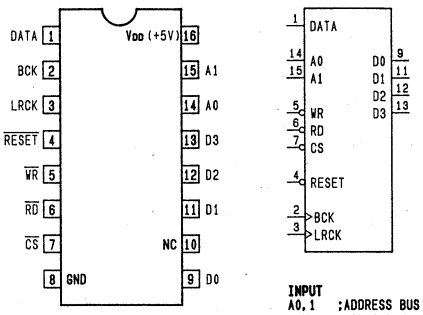

INPUT
A0, 1 ;ADDRESS BUS
BCK ;BIT CLOCK
DATA ;AUDIO SERIAL DATA
LRCK ;LR CLOCK
$\overline{CS}$;CHIP SELECT
$\overline{RESET}$;RESET
$\overline{RD}$;DATA READ
$\overline{WR}$;DATA WRITE
INPUT/OUTPUT
D0–4 ;DATA BUS

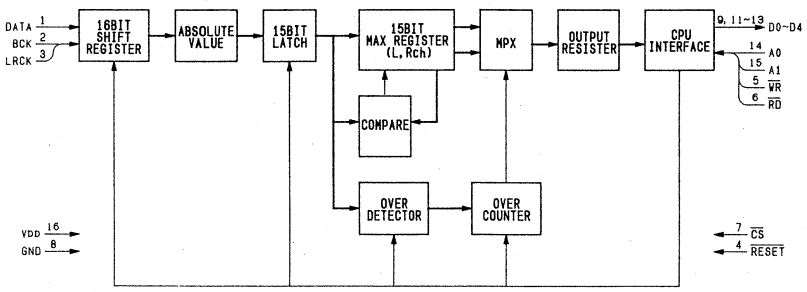

NJM4560M (JRC) FLAT PACKAGE

DUAL OPERATIONAL AMPLIFIER

– TOP VIEW –

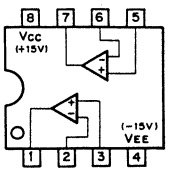

NJM7805FA (JRC) + 5V
NJM7809FA (JRC) + 9V
XRA17809T (EXAR) + 9V

POSITIVE VOLTAGE REGULATOR (500mA)

– FRONT VIEW –

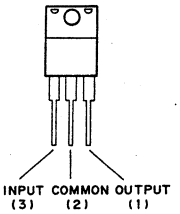

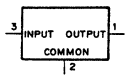

NJM78L05A (JRC) + 5V (100mA)

POSITIVE VOLTAGE REGULATOR

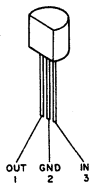

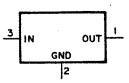

NJM7905FA (JRC) – 5V
NJM7909FA (JRC) – 9V

NEGATIVE VOLTAGE REGULATOR (500mA)

– FRONT VIEW –

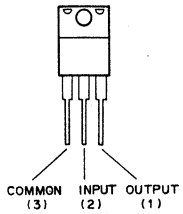

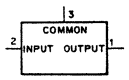

PALCE16V8Q-25JC (AMD)

C-MOS ELECTRICALLY ERASABLE PROGRAMMABLE LOGIC DEVICE

– TOP VIEW –

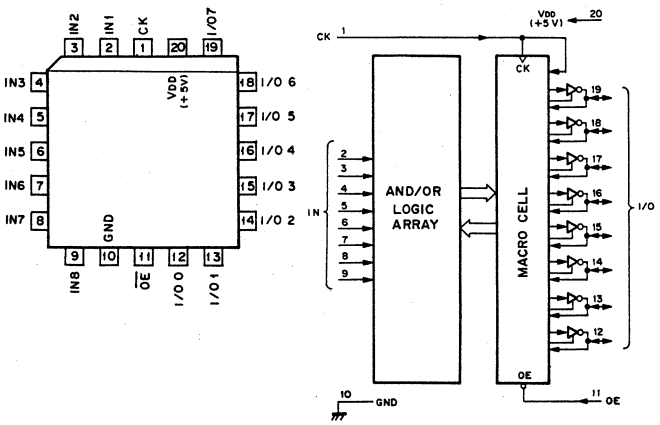

* ABOVE DIAGRAM SHOWS CONDITIONS BEFORE PROGRAMMING.

PCM56P (BURR-BROWN)

SERIAL INPUT D/A CONVERTER FOR DIGITAL AUDIO

– TOP VIEW –

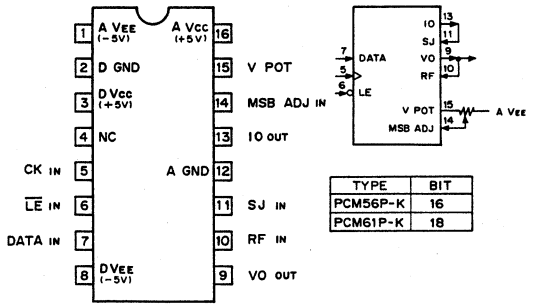

TYPE	BIT
PCM56P-K	16
PCM61P-K	18

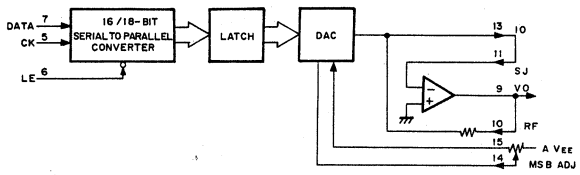

DATA ; SERIAL DATA INPUT MSB FIRST
BINARY 2's COMPLEMENT
CK ; CLOCK INPUT, ↓
LE ; LATCH ENABLE, ↑
IO ; CURRENT OUTPUT
SJ ; SUMMING JUNCTION
VO ; VOLTAGE OUTPUT
RF ; FEEDBACK RESISTOR
VPOT ; MSB TRIM POTENTIOMETER
MSB ADJ ; MSB ADJUSTMENT

DIGITAL INPUT BTC (HEX)		ANALOG OUTPUTS		
PCM56P-K	PCM61-K	DAC OUTPUT	VO (V)	IO (mA)
7FFF	7FFFFF	+FULL SCALE	+2.999908	–0.999970
8000	80003F	–FULL SCALE	–3.000000	+1.000000
0000	00003F	BIPOLAR ZERO	0.000000	0.000000
FFFF	FFFFFF	ZERO-1LSB	–0.000092	+0.030500 µA

BTC : BINARY TWO'S COMPLEMENT

SC7S00F (MOTOROLA) CHIP PACKAGE
TC7S00F (TOSHIBA) CHIP PACKAGE
C-MOS 2-INPUT NAND GATE

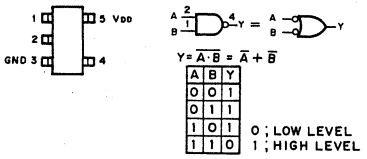

TYPE	VDD
7S00F	+ 2 to + 6V
4S11F 4SU11F	+ 3 to + 18V

SN74HC00ANS (TI) FLAT PACKAGE
C-MOS QUAD 2-INPUT NAND GATES
– TOP VIEW –

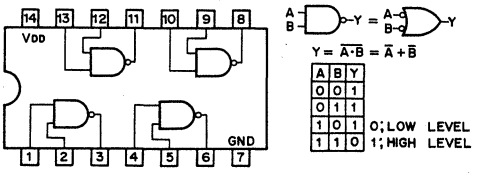

NOTE :

TYPE	VDD
TC74AC00 TYPE TC74VHC00	+2 to +5.5V
MC74HCT00N	+5V
74ACT00 TYPE	+4.5 to +5.5V
OTHER TYPES	+2 to +6V

SN74HC02ANS (TI) FLAT PACKAGE
C-MOS QUAD 2-INPUT NOR GATES
– TOP VIEW –

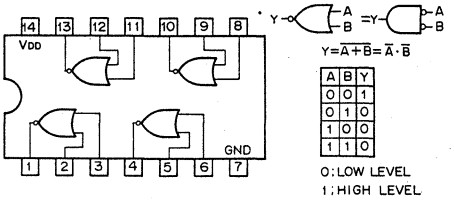

NOTE :

TYPE	VDD
TC74AC02F	+2 to +5.5V
74ACT02SJ TC74ACT02F	+4.5 to +5.5V
OTHER TYPES	+2 to +6V

SN74HC04ANS (TI) FLAT PACKAGE
SN74HCU04ANS (TI) FLAT PACKAGE
C-MOS HEX INVERTERS
– TOP VIEW –

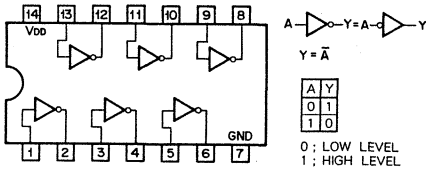

NOTE :

TYPE	VDD
74HCT04 TYPE	+ 5V
TC74AC04 TYPE TC74VHC04 TYPE	+ 2 to + 5.5V
74ACT04 TYPE	+ 4.5 to + 5.5V
OTHER TYPES	+ 2 to + 6V

SN74HC08ANS (TI) FLAT PACKAGE
C-MOS QUAD 2-INPUT AND GATES
– TOP VIEW –

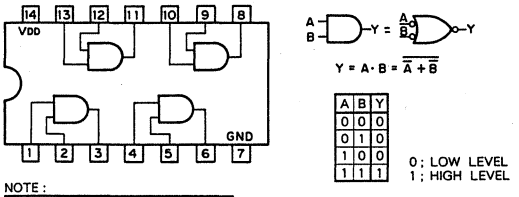

NOTE :

TYPE	VDD
TC74AC08F MC74ACT08M	+ 2 to + 5.5V
TC40H	+ 2 to + 8V
OTHER TYPES	+ 2 to + 6V

SN74HC126ANS (TI) FLAT PACKAGE
C-MOS BUS BUFFER GATE WITH 3-STATE OUTPUT
– TOP VIEW –

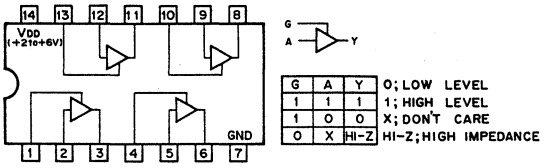

SN74HC139ANS (TI) FLAT PACKAGE
C-MOS DUAL 2-TO-4 DECODER/DEMULTIPLEXER
– TOP VIEW –

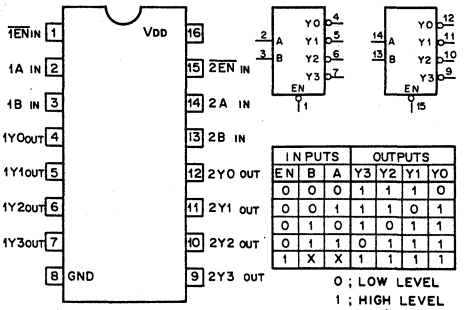

NOTE :

TYPE	VDD
74AC/74HC	+2 to +6V
74ACT	+5V
TC74AC139	+2 to +5.5V

SN74HC14ANS (TI) FLAT PACKAGE
C-MOS HEX SCHMITT TRIGGER INVERTERS
– TOP VIEW –

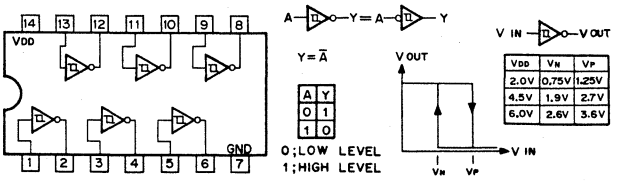

NOTE :

TYPE	VDD
TC74AC14 TYPE	+2 to +5.5V
OTHER TYPES	+2 to +6V

SN74HC164ANS (TI) FLAT PACKAGE

C-MOS 8-BIT SERIAL-IN/PARALLEL-OUT SHIFT REGISTER
– TOP VIEW –

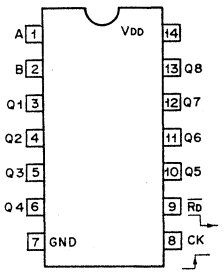

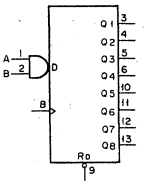

INPUTS				OUTPUTS				
RD	CK	A	B	Q1	Q2	----	Q8	
0	X	X	X	0	0	0	0	
1	0	X	X	Q1o	Q2o	----	Q8o	
1	↑	1	1	1	Q1n	----	Q7n	0;LOW LEVEL
1	↑	0	X	0	Q1n	----	Q7n	1;HIGH LEVEL
1	↑	X	0	0	Q1n	----	Q7n	X;DON'T CARE

NOTE :

TYPE	VDD
TC74AC164 TYPE	+2 to +5.5V
OTHER TYPES	+2 to +6V

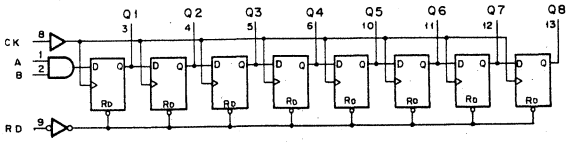

SN74HC21ANS (TI) FLAT PACKAGE

C-MOS DUAL 4-INPUT POSITIVE AND GATE
– TOP VIEW –

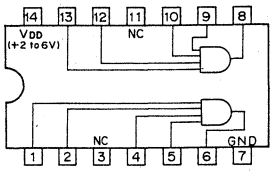

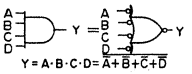

A	B	C	D	Y
0	0	0	0	0
0	0	0	1	0
0	0	1	0	0
0	0	1	1	0
0	1	0	0	0
:	:	:	:	:
1	1	0	1	0
1	1	1	0	0
1	1	1	1	1

0;LOW LEVEL
1;HIGH LEVEL

SN74HC257ANS (TI) FLAT PACKAGE

C-MOS 2-LINE-TO-1-LINE DATA SELECTOR/MULTIPLEXER
– TOP VIEW –

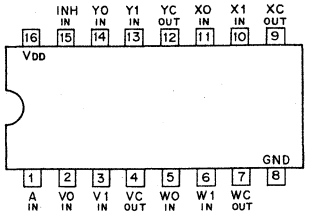

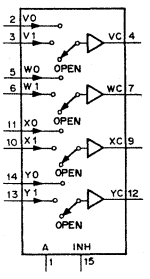

CONT. IN		ON
INH	A	CHANNEL
0	0	0
0	1	1
1	X	OPEN

0;LOW LEVEL
1;HIGH LEVEL
X;DON'T CARE

NOTE :

TYPE	VDD
74AC/74HC	+2 to +6V
74ACT	+5V
TC74AC257F	+2 to +5.5V

SN74HC166ANS (TI) FLAT PACKAGE

C-MOS 8-BIT SHIFT REGISTER
– TOP VIEW –

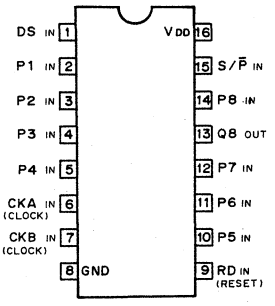

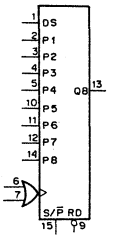

DS:DATA SERIAL INPUT
P1-P8:DATA PARALLEL INPUT
CK:CLOCK

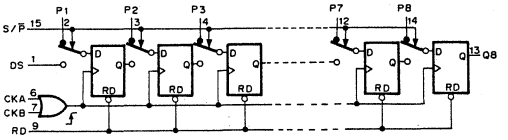

CKA	CKB	CK
0	0	0
X	1	1
1	X	1
1	↑	1
↑	1	1
0	↑	↑
↑	0	↑

INPUT					OUTPUT
RD	S/P	CK	DS	P1-P8	Q8
0	X	X	X	X	0
1	X	0	X	X	Q8o
1	0	↑	X	1-8	8
1	1	↑	1	X	Q7n
1	1	↑	0	X	Q7n
1	X	↑	X	X	Q8o

0; LOW LEVEL
1; HIGH LEVEL
X; DON'T CARE

NOTE :

TYPE	VDD
TC40H	+2 to +8V
OTHERS	+2 to +6V

SN74HC32ANS (TI) FLAT PACKAGE

C-MOS QUAD 2-INPUT OR GATES
– TOP VIEW –

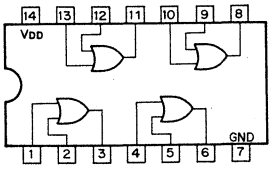

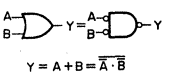

A	B	Y
0	0	0
0	1	1
1	0	1
1	1	1

0;LOW LEVEL
1;HIGH LEVEL

NOTE :

TYPE	VDD
TC74AC32 TYPE TC74VHC32	+2 to +5.5V
OTHER TYPES	+2 to +6V

SN74HC541ANS (TI) FLAT PACKAGE

C-MOS BUFFERS AND LINE DRIVERS WITH 3-STATE OUTPUTS
– TOP VIEW –

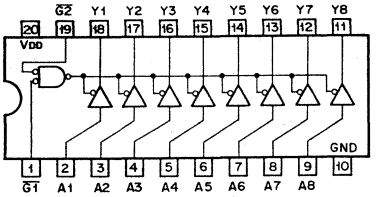

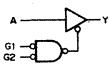

G1	G2	A	Y
0	0	0	0
0	0	1	1
↑	X	X	HI-Z
X	↑	X	HI-Z

0;LOW LEVEL
1;HIGH LEVEL
X;DON'T CARE
HI-Z;HIGH IMPEDANCE

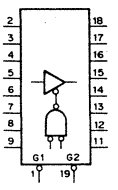

NOTE :

TYPE	VDD
AC/VHC	+2 to +5.5V
HC	+2 to +6V
ACT/BCT/HCT	+5V

SN74HC574ANS (TI) FLAT PACKAGE

C-MOS 3-STATE D-TYPE EDGE-TRIGGERED FLIP-FLOP
– TOP VIEW –

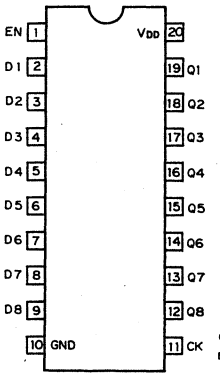

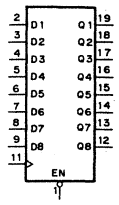

EACH FLIP-FLOP

INPUTS			OUT
EN	CK	D	Q
0	↑	1	1
0	↑	0	0
0	↓	X	Q_0
1	X	X	HI-Z

0 ; LOW LEVEL
1 ; HIGH LEVEL
X ; DON'T CARE
HI-Z ; HIGH IMPEDANCE
Q_0 ; NO CHANGE

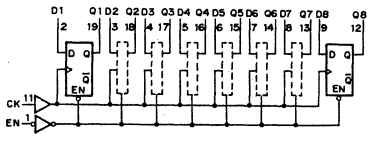

NOTE :

TYPE	V_{DD}
74AC/74HC	+ 2 to + 6V
74ACT/74FCT /74HCT	+ 5V
TC74AC574F TC74VHC574	+ 2 to + 5.5V

SN74HC74ANS (TI) FLAT PACKAGE

C-MOS DUAL D-TYPE FLIP-FLOPS WITH DIRECT SET/RESET
– TOP VIEW –

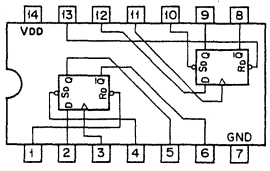

INPUTS				OUTPUTS	
$\overline{SD}$	$\overline{RD}$	CK	D	Qn+1	$\overline{Qn+1}$
0	1	X	X	1	0
1	0	X	X	0	1
0	0	X	X	1	1
1	1	↑	1	1	0
1	1	↑	0	0	1
1	1	0	X	Qn	$\overline{Qn}$

0; LOW LEVEL
1; HIGH LEVEL
X; DON'T CARE

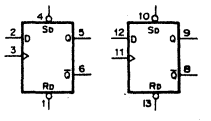

NOTE :

TYPE	V_{DD}
.TC74HCT74AF	+5V
TC74AC74 TYPE	+2 to +5.5V
74ACT74 TYPE	+4.5 to +5.5V
OTHER TYPES	+2 to +6V

SN74LS03NS (TI) FLAT PACKAGE

TTL 2-INPUT POSITIVE-NAND GATE WITH OPEN-COLLECTOR
– TOP VIEW –

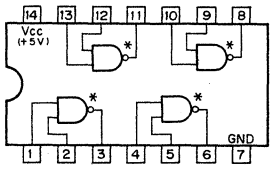

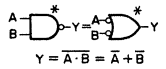

$Y = \overline{A \cdot B} = \bar{A} + \bar{B}$

A	B	Y
0	0	1
0	1	1
1	0	1
1	1	0

0;LOW LEVEL
1;HIGH LEVEL

SN74LS624NS (TI) FLAT PACKAGE

TTL VOLTAGE CONTROLLED OSCILLATOR
– TOP VIEW –

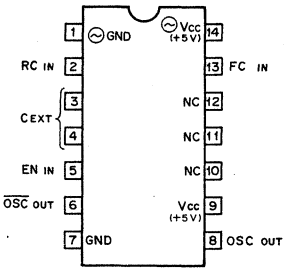

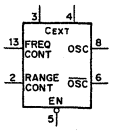

EN	OSC	$\overline{OSC}$
0	ENABLE	ENABLE
1	0	1

0; LOW LEVEL
1; HIGH LEVEL

ST93CS56M1 (SGS-THOMSON MICRO ELECTRONICS) FLAT PACKAGE

C-MOS SERIAL ACCESS 2k (128 x 16)-BIT EEPROM
– TOP VIEW –

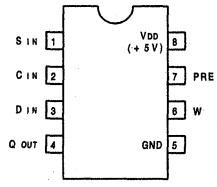

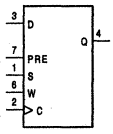

INPUT
C ;SERIAL CLOCK
D ;SERIAL DATA
PRE ;PROTECT ENABLE
S ;CHIP SELECT
W ;WRITE ENABLE

OUTPUT
Q ;SERIAL DATA

TA7291F (TOSHIBA) FLAT PACKAGE

DC MOTOR FULLBRIDGE DRIVER
– TOP VIEW –

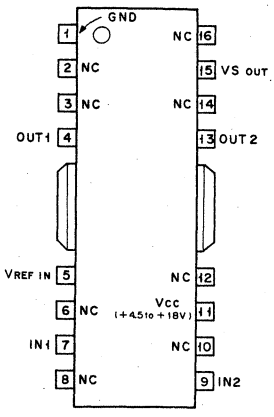

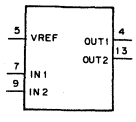

INPUT		OUTPUT		MODE
IN1	IN2	OUT1	OUT2	
0	0	HI-Z	HI-Z	STOP
1	0	1	0	CW/CCW
0	1	0	1	CCW/CW
1	1	0	0	BRAKE

0 ; LOW LEVEL
1 ; HIGH LEVEL
HI-Z; HIGH IMPEDANCE

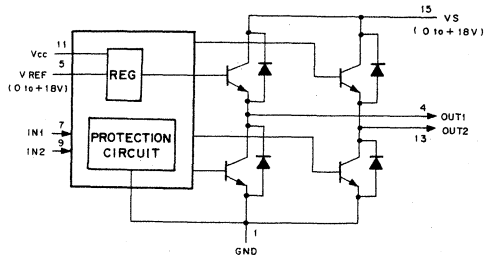

TA7809S (TOSHIBA) + 9V

POSITIVE VOLTAGE REGULATOR (0.5A)

– SIDE VIEW –

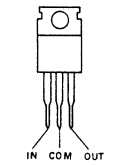

TC4052BFHB (TOSHIBA) FLAT PACKAGE

C-MOS DUAL 4-CHANNEL ANALOG MULTIPLEXERS/DEMULTIPLEXERS

– TOP VIEW –

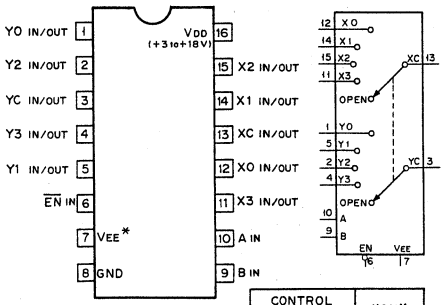

VEE* ; VDD – VEE = + 3 to + 18V

CONTROL INPUTS			"ON" CHANNEL
EN	B	A	
0	0	0	0
0	0	1	1
0	1	0	2
0	1	1	3
1	X	X	OPEN

0 ; LOW LEVEL
1 ; HIGH LEVEL
X ; DON'T CARE.

TC4S66F (TOSHIBA) CHIP PACKAGE

C-MOS BILATERAL ANALOG SWITCH

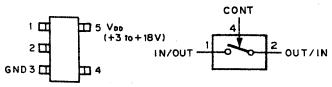

CONT	SWITCH
0	OFF
1	ON

0 ; LOW LEVEL
1 ; HIGH LEVEL

TC7SU04F (TOSHIBA) CHIP PACKAGE

C-MOS INVERTER

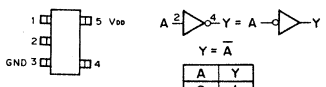

A	Y
0	1
1	0

0 ; LOW LEVEL
1 ; HIGH LEVEL

TYPE	VDD
7S04F 7SU04F	+ 2 to + 6V
4S69F 4SU69F	+ 3 to + 18V

TD62381F (TOSHIBA) FLAT PACKAGE

OCTAL LOW SATURATION DRIVER

– TOP VIEW –

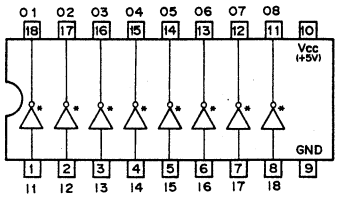

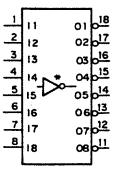

* ; OPEN COLLECTOR

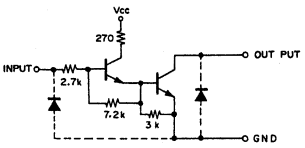

TL431CPS (TI) FLAT PACKAGE

ADJUSTABLE PRECISION SHUNT REGULATOR

– TOP VIEW –

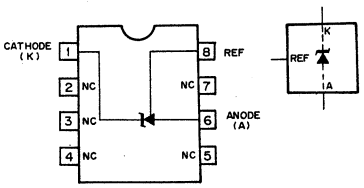

TL7705CPS-B (TI) FLAT PACKAGE

POWER VOLTAGE SUPERVISOR

– TOP VIEW –

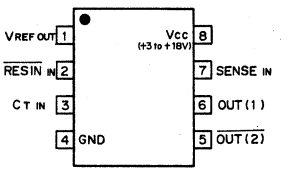

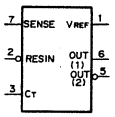

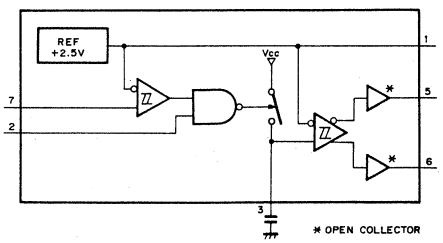

TMS27C240-12JL (TI)

C-MOS 4M (262k X 16)-BIT UV EPROM
– TOP VIEW –

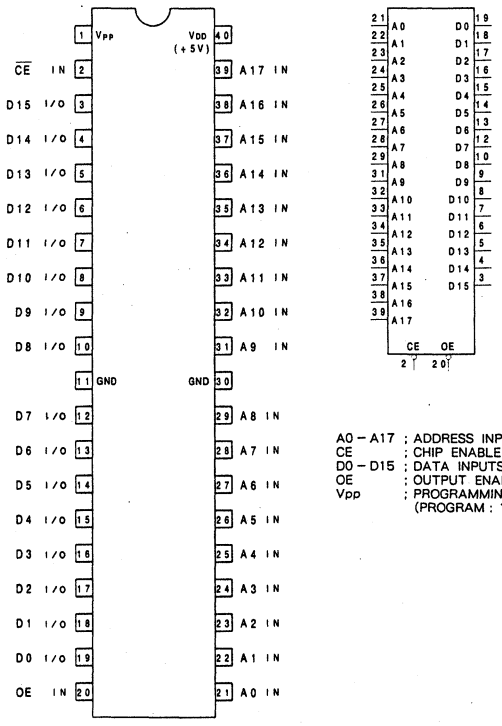

A0 – A17 ; ADDRESS INPUTS
CE ; CHIP ENABLE
D0 – D15 ; DATA INPUTS/OUTPUTS
OE ; OUTPUT ENABLE
VPP ; PROGRAMMING VOLTAGE (PROGRAM : 13.0V)

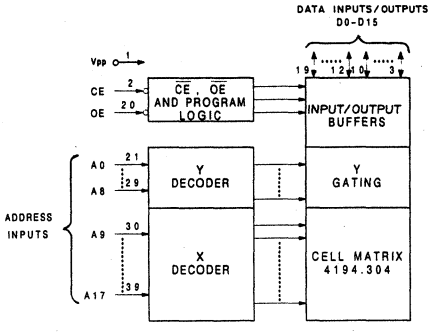

ABOVE DIAGRAM SHOWS CONDITIONS BEFORE PROGRAMMING.

CE	OE	VPP	VDD	A9	A0	D0 – D15	FUNCTION
0	0	VDD	VDD	×	×	DOUT	READ
0	1	VDD	VDD	×	×	HI-Z	OUTPUT DISABLE
0	1	VPP	VDD	×	×	DIN	PROGRAMMING
1	0	VPP	VDD	×	×	DOUT	VERIFY
1	1	VPP	VDD	×	×	HI-Z	PROGRAM INHIBIT
1	×	VDD	VDD	×	×	HI-Z	STANDBY
0	0	VDD	VDD	VH	0	97 (MAKER CODE)	SIGNATURE MODE
				VH	1	30 (DEVICE CODE)	

1 ; HIGH LEVEL
0 ; LOW LEVEL
× ; DON'T CARE
HI-Z ; HIGH IMPEDANCE
VH ; 12.0 ± 0.5 V

TMS44400-80SD (TI) (ACCESS TIME = 80nS)

C-MOS 4M (1,048,576x4)-BIT DYNAMIC RAM (ZIP PACKAGE)
– SIDE VIEW –

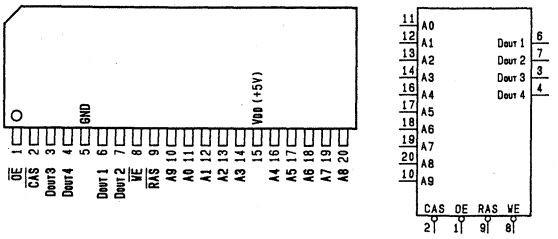

A0–A9 ;ADDRESS INPUT
CAS ;COLUMN ADDRESS STROBE INPUT
DOUT1–DOUT4 ;DATA INPUTS/OUTPUTS
OE ;OUTPUT ENABLE INPUT
RAS ;ROW ADDRESS STROBE INPUT
WE ;WRITE ENABLE INPUT

UPC358G2 (NEC) FLAT PACKAGE

DUAL OPERATIONAL AMPLIFIERS
– TOP VIEW –

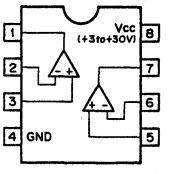

UPC78L05T (NEC) + 5V

POSITIVE VOLTAGE REGULATOR (100mA)

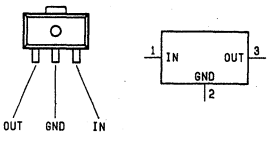

UPD4702G (NEC)

C-MOS INCREMENTAL ENCODER 8BIT UP DOWN COUNTER
– TOP VIEW –

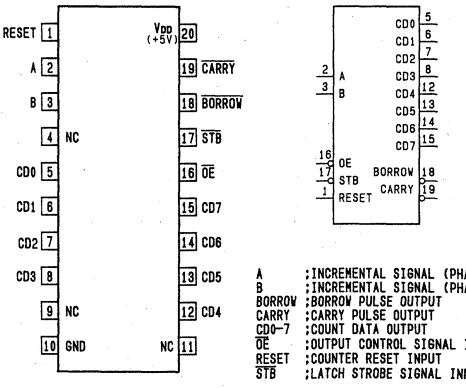

A ;INCREMENTAL SIGNAL (PHASE A) INPUT
B ;INCREMENTAL SIGNAL (PHASE B) INPUT
BORROW ;BORROW PULSE OUTPUT
CARRY ;CARRY PULSE OUTPUT
CD0–7 ;COUNT DATA OUTPUT
OE ;OUTPUT CONTROL SIGNAL INPUT
RESET ;COUNTER RESET INPUT
STB ;LATCH STROBE SIGNAL INPUT

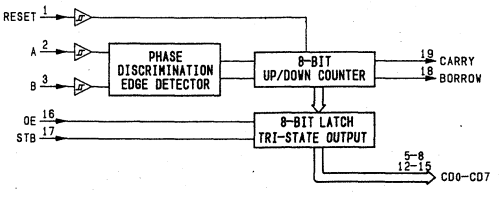

UPD70216L (NEC)

C-MOS 16 BIT MICROPROCESSOR

– TOP VIEW –

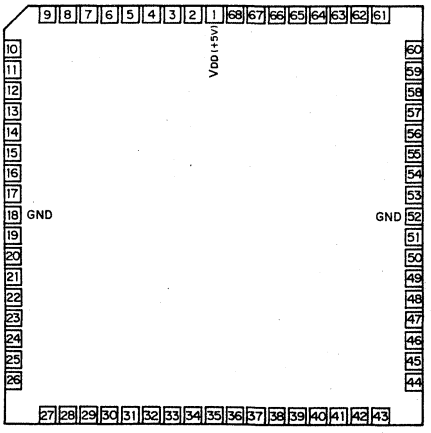

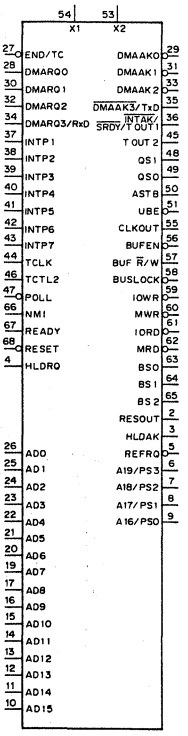

PIN NO.	FUNCTION	PIN NO.	FUNCTION	PIN NO.	FUNCTION	PIN NO.	FUNCTION
1	VDD (+5V)	18	GND	35	DMAAK3/TxD	52	GND
2	RES OUT	19	AD7	36	INTAK/SRDY/TOUT1	53	X2
3	HLDAK	20	AD6	37	INTP1	54	X1
4	HLDRQ	21	AD5	38	INTP2	55	CLK OUT
5	REFRQ	22	AD4	39	INTP3	56	BUFEN
6	A19/PS3	23	AD3	40	INTP4	57	BUFR/W
7	A18/PS2	24	AD2	41	INTP5	58	BUSLOCK
8	A17/PS1	25	AD1	42	INTP6	59	IOWR
9	A16/PS0	26	AD0	43	INTP7	60	MWR
10	AD15	27	END/TC	44	TCLK	61	IORD
11	AD14	28	DMARQ0	45	Tout2	62	MRD
12	AD13	29	DMAAK0	46	TCTL2	63	BS0
13	AD12	30	DMARQ1	47	POLL	64	BS1
14	AD11	31	DMAAK1	48	QS1	65	BS2
15	AD10	32	DMARQ2	49	QS0	66	NM1
16	AD9	33	DMAAK2	50	ASTB	67	READY
17	AD8	34	DMARQ3/RxD	51	UBE	68	RESET

A16/PS0-A19/PS3	(O)	; ADDRESS/PROCESSOR STATUS
AD0-AD15	(I/O)	; ADDRESS BUS/DATA BUS
ASTB	(O)	; ADDRESS STROBE
BS0-BS2	(O)	; BUS STATUS
BUFEN	(O)	; BUFFER ENABLE
BUF R/W	(O)	; BUFFER READ/WRITE
BUSLOCK	(O)	; BUS LOCK
CLKOUT	(O)	; CLOCK OUTPUT
DMAAK0-2	(O)	; DMA ACKNOWLEDGE 0 – 2
DMAAK3/TxD	(O)	; DMA ACKNOWLEDGE3/TRANSMIT DATA
DMARQ0-2	(I)	; DMA REQUEST 0-2
DMARQ3/RxD	(I)	; DMA REQUEST/RECEIVE DATA
END/TC	(I/O)	; END/TERMINAL COUNT
HLDAK	(O)	; BUS HOLD ACKNOWLEDGE
HLDRQ	(I)	; BUS HOLD REQUEST
INTAK/SRDY/TOUT1	(O)	; INTERRUPT ACKNOWLEDGE/SERIAL READY/TIMER OUT 1
INTP0-INTP7	(I)	; INTERRUPT REQUEST FROM PERIPHERAL 0 – 7
IORD	(O)	; I/O READ STROBE
IOWR	(O)	; I/O WRITE STROBE
MRD	(O)	; MEMORY READ STROBE
MWR	(O)	; MEMORY WRITE STROBE
NMI	(I)	; NON MASKABLE INTERRUPT
POLL	(I)	; POLL
QS0,QS1	(O)	; QUEUE STATUS
READY	(I)	; READY
REFRQ	(O)	; REFRESH REQUEST
RESET	(I)	; RESET
RES OUT	(O)	; SYSTEM RESET
TCLK	(I)	; TIMER CLOCK
TCTL2	(I)	; TIMER CONTROL 2
TOUT2	(O)	; TIMER OUT 2
UBE	(O)	; UPPER BYTE ENABLE
X1,2	(I)	; CRYSTAL 1,2

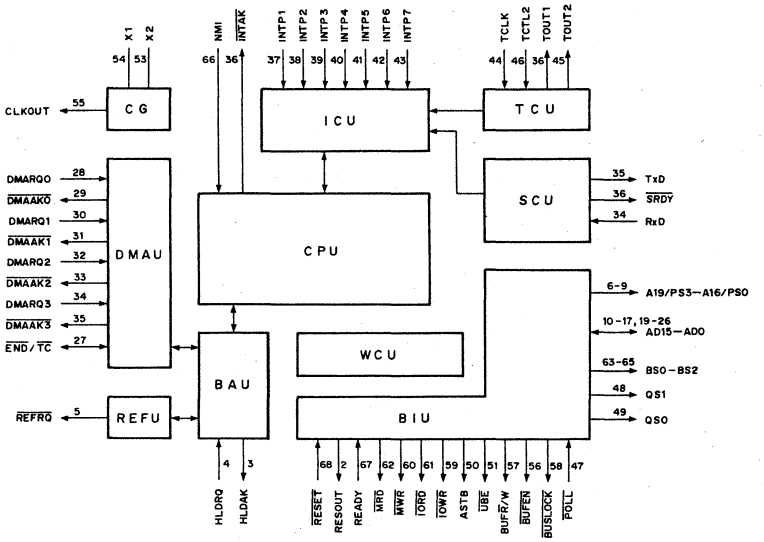

UPD71054GB-10-3B4 (NEC) FLAT PACKAGE

C-MOS PROGRAMMABLE TIMER COUNTER

– TOP VIEW –

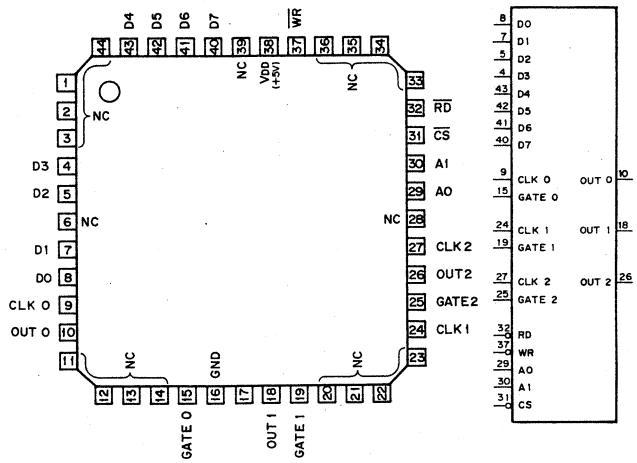

FUNCTION TABLE

INPUTS					FUNCTION
CS	RD	WR	A1	A0	
0	1	0	0	0	COUNTER NO. 1 WRITE
0	1	0	0	1	COUNTER NO. 2 WRITE
0	1	0	1	0	COUNTER NO. 3 WRITE
0	1	0	1	1	CONTROL WORD WRITE
0	0	1	0	0	COUNTER NO. 1 READ
0	0	1	0	1	COUNTER NO. 2 READ
0	0	1	1	0	COUNTER NO. 3 READ
0	0	1	1	1	NO-OPERATION (HI-Z)
1	X	X	X	X	DISABLE (HI-Z)
0	1	1	X	X	NO-OPERATION (HI-Z)

A1,A0 ; SELECTED READ/WRITE OPERATION
CLK n ; COUNTER CLOCK INPUT n
CS ; CHIP SELECT
D7-D0 ; 8-BIT DATA I/O
GATE n; COUNTER GATE INPUT n
IC ; INTERNALLY CONNECTED
OUT n ; COUNTER CLOCK OUTPUT n
RD ; READ COUNTER/STATUS
WR ; WRITE COMMAND/DATA

0;LOW LEVEL
1;HIGH LEVEL
X;DON'T CARE
HI-Z;HIGH IMPEDANCE

CONTROL WORD FORMAT

D7	D6	D5	D4	D3	D2	D1	D0
SC1	SC0	RWM1	RWM0	CM2	CM1	CM0	BCD

BCD : BINARY CODED DECIMAL

BCD	COUNTER OPERATION
0	16-BIT BINARY COUNT
1	4-FIGURE BCD COUNT

CM2	CM1	CM0	COUNTER MODE
0	0	0	MODE 0
0	0	1	MODE1
X	1	0	MODE 2
X	1	1	MODE 3
1	0	0	MODE 4
1	0	1	MODE 5

RWM1	RWM0	READ/WRITE MODE
0	0	COUNTER LATCHING CMD.
0	1	LSB ONLY
1	0	MSB ONLY
1	1	LSB FIRST THEN MSB

SC1	SC0	OPERATION
0	0	SELECTED COUNTER No.0
0	1	SELECTED COUNTER No.1
1	0	SELECTED COUNTER No.2
1	1	MULTIPLE LATCH COMMAND

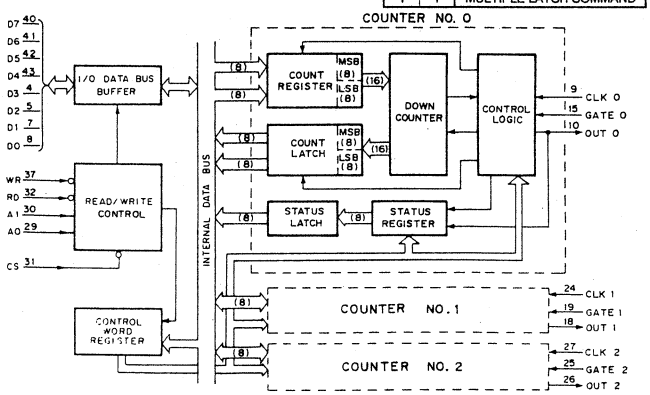

UPD71055GB-10-3B4 (NEC) FLAT PACKAGE

C-MOS PARALLEL INTERFACE UNIT

– TOP VIEW –

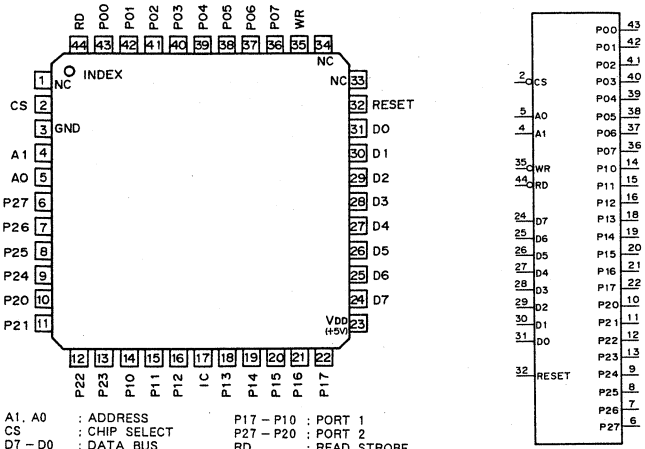

A1, A0 : ADDRESS
CS : CHIP SELECT
D7 – D0 : DATA BUS
P07 – P00 : PORT 0
P17 – P10 : PORT 1
P27 – P20 : PORT 2
RD : READ STROBE
WR : WRITE STROBE

IC : INTERNALLY CONNECTED

CS	RD	WR	A1	A0	OPERATION	CPU ACTION
0	0	1	0	0	PROT 0 → DATA BUS	INPUT
0	0	1	0	1	PROT 1 → DATA BUS	INPUT
0	0	1	1	0	PROT 2 → DATA BUS	INPUT
0	0	1	1	1	DISABLE	
0	0	0	X	X		
0	1	0	0	0	DATA BUS → PROT 0	OUTPUT
0	1	0	0	1	DATA BUS → PROT 1	OUTPUT
0	1	0	1	0	DATA BUS → PROT 2	OUTPUT
0	1	0	1	1	DATA BUS → COMMAND REGISTER	OUTPUT
0	1	1	X	X	HIGH IMPEDANCE	
1	X	X	X	X		

0 ; LOW LEVEL
1 ; HIGH LEVEL
X ; DON'T CARE

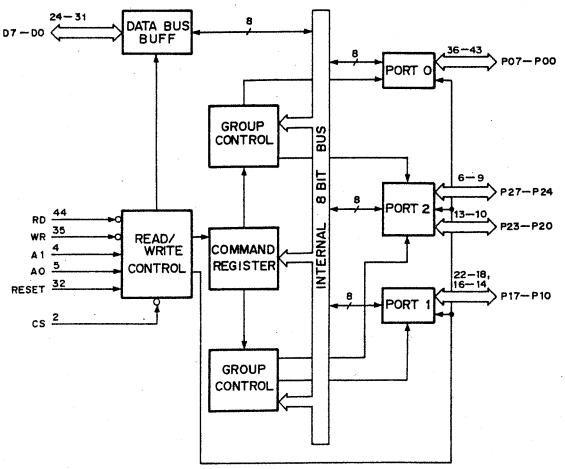

UPD71101GD-10-5BB (NEC)

C-MOS ENCAPSULATED PERIPHERAL
– TOP VIEW –

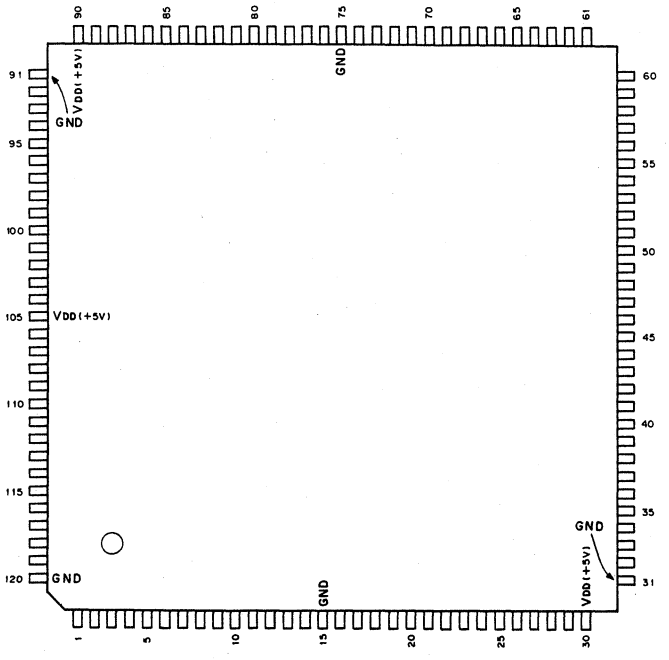

(VDD = + 5V)

PIN No.	I/O	SIGNAL	PIN No.	I/O	SIGNAL	PIN No.	I/O	SIGNAL
1	I/O	P27	41	I/O	SA11	81	I	$\overline{RXCLK0}$
2	I/O	P26	42	I/O	SA12	82	I	RXDATA0
3	I/O	P25	43	I/O	$\overline{SUB}$/(BUF$\overline{R}$/W) 1	83	I/O	SYNC/BRK0
4	I/O	P24	44	O	INT1	84	O	RXRDY0
5	I/O	P23	45	I	INTP17	85	O	TXRDY0
6	I/O	P22	46	I	INTP16	86	O	TXDATA0
7	I/O	P21	47	I	INTP15	87	O	TXEMP0
8	I/O	P20	48	I	INTP14	88	O	$\overline{RTS0}$
9	I/O	P10	49	I	INTP13	89	O	$\overline{DTR0}$
10	I/O	P11	50	I	INTP12	90	–	VDD
11	I/O	P12	51	I	INTP11	91	–	GND
12	I/O	P13	52	I	INTP10	92	I/O	D7
13	I/O	P14	53	I	$\overline{INTAK1}$	93	I/O	D6
14	I/O	P15	54	I	$\overline{CSI1}$	94	I/O	D5
15	–	GND	55	I	$\overline{CSI0}$	95	I/O	D4
16	I/O	P16	56	I	$\overline{INTAK0}$	96	I/O	D3
17	I/O	P17	57	I	INTPO7	97	I/O	D2
18	I	$\overline{CSB}$	58	I	INTPO6	98	I/O	D1
19	I	BCLK	59	I	INTPO5	99	I/O	D0
20	I	RXDATA1	60	I	INTPO4	100	I	$\overline{CST}$
21	I	$\overline{TXCLK1}$	61	I	INTPO3	101	I	TCLK0
22	I	$\overline{CSS1}$	62	I	INTPO2	102	I	GATE0
23	I	$\overline{CTS1}$	63	I	INTPO1	103	O	OUT0
24	I	SCLK1	64	I	INTPO0	104	I	TCLK0
25	I	$\overline{DSR1}$	65	O	INT0	105	–	VDD
26	I	$\overline{RXCLK1}$	66	I/O	$\overline{SUB}$/(BUF$\overline{R}$/W) 0	106	I	GATE1
27	O	$\overline{RXRDY1}$	67	I/O	SAO2	107	O	OUT1
28	O	TXRDY1	68	I/O	SAO1	108	I	TCLK2
29	I/O	SYNC/BRK1	69	I/O	SAO0	109	I	GATE2
30	–	VDD	70	I	$\overline{WR}$	110	O	OUT2
31	–	GND	71	I	$\overline{RD}$	111	I/O	PO7
32	O	RXBCLOCK	72	I	A0	112	I/O	PO6
33	O	RXACLOCK	73	I	A1	113	I/O	PO5
34	O	TXBCLOCK	74	I	RESET	114	I/O	PO4
35	O	TXACLOCK	75	–	GND	115	I/O	PO3
36	O	TXDATA1	76	I	$\overline{CSS0}$	116	I/O	PO2
37	O	TXEMP1	77	I	$\overline{TXCLK0}$	117	I/O	PO1
38	O	$\overline{RTS1}$	78	I	$\overline{CTS0}$	118	I/O	PO0
39	O	$\overline{DTR1}$	79	I	SCLK0	119	I	$\overline{CSP}$
40	I/O	SA10	80	I	$\overline{DSR0}$	120	–	GND

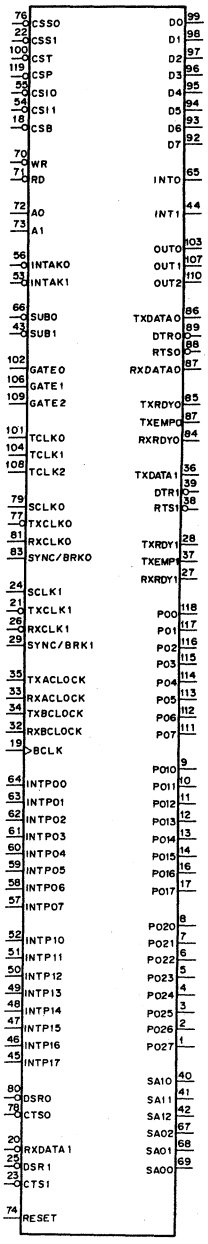

INPUT

A0, A1	; REGISTER SELECTING
BCLK	; CLOCK FOR BAUD RATE GENERATING
$\overline{CSB}$	; BRG UNITSELECT
$\overline{CSI0}$	; INTERRUPT CONTROL UNIT 0 SELECTE
$\overline{CSI1}$	; INTERRUPT CONTROL UNIT 1 SELECTE
$\overline{CSP}$	; PARALLEL INTERFACE UNIT SELECTE
$\overline{CSS0}$	; SERIAL CONTROL UNIT 0 SELECTE
$\overline{CSS1}$	; SERIAL CONTROL UNIT 1 SELECTE
$\overline{CST}$	; TIMER COUNTER UNIT SELECTE
$\overline{CTS0}$, $\overline{CTS1}$	; TRANSFER CONTROL
$\overline{DSR0}$, $\overline{DSR1}$	; MODEM CONTROL/GENERAL PURPOSE
GATE0 – GATE2	; COUNTER CONTROL
$\overline{INTAK0}$ – $\overline{INTAK1}$	; INTERRUPTION ACKNOWLEDGE (FROM CPU TO ICU)
INTP00 – INTP07, INTP10 – INTP17	; ASYCHRONOUS MODE INTERRUPT REQUEST FOR INTERRUPT CONTROL UNIT
$\overline{RD}$	; READING
$\overline{RESET}$	; INITIALIZED
$\overline{RXCLK0}$, $\overline{RXCLK1}$	; REFERENCE CLOCK FOR DECIDING RECEPTION RATE
RXDATA0, RXDATA1	; RECEIVES SERIAL DATA
SCLK0, SCLK1	; COLCK FOR SCU INTERNAL TIMING
TCLK0 – TCLK2	; CLOCK (0 TO 10MHz) FOR COUNTER RATE
$\overline{TXCLK0}$ – $\overline{TXCLK1}$	; REFERENCE CLOCK FOR TRANSFER RATE
$\overline{WR}$	; WRITE

OUTPUT

$\overline{DTR0}$, $\overline{DTR1}$	; MODEM CONTROL/GENERAL PURPOSE
INT0, INT1	; INTERRUPTION REQUEST (FROM ICU TO CPU OR MASTER ICU)
OUT0 – OUT2	; COUNTER OUTPUT/INTERRUPTION REQUEST FOR TCU
$\overline{RTS0}$ – $\overline{RTS1}$	; MODEM CONTROL/GENERAL PURPOSE
RXACLOCK, RXBCLOCK	; RECEIVED CLOCK OF BAND RATE GENERATOR
RXRDY0, RXRDY1	; READING INTERRUPTION REQUEST FOR CPU, RECEIVED DATA STATUS
TXACLOCK TXBCLOCK	; TRANSFER CLOCK OF BAND RATE GENERATOR
TXDATA0, TXDATA1	; SERIAL DATA
TXEMP0, TXEMP1	; TRANSMITTER BUFFER AND TRANSMIT DATA BUFFER STATUS
TXRDY0, TXRDY1	; WRITING ACKNOWLEDGE/WRITING INTERRUPT REQUEST FOR CPU

INPUT/OUTPUT

D0 – D7	; BI-DIRECTIONAL DATA BUS OF 8-BITS TRI-STATE
SYNC/BRK0, SYNC/BRK1	; SYNC IN OR OUTPUT /BRK CONDITION DETECT OUTPUT (SYNCHRONOUS MODE)
P00 – P07	; PORT0
P10 – P17	; PORT1
P20 – P27	; PORT2
SA00 – SA02, SA10 – SA12	; ICU CONTROL OUTPUT (MASTER MODE) /ICU CONTROL INPUT (SUB MODE)
$\overline{SUB}$/(BUF $\overline{R}$/W) 1	; SUB/MASTER SELECT (NO-BUFFER MODE),
$\overline{SUB}$/(BUF $\overline{R}$/W) 2	BUS TRANCEIVER CONTROL OUTPUT (BUFFER MODE)

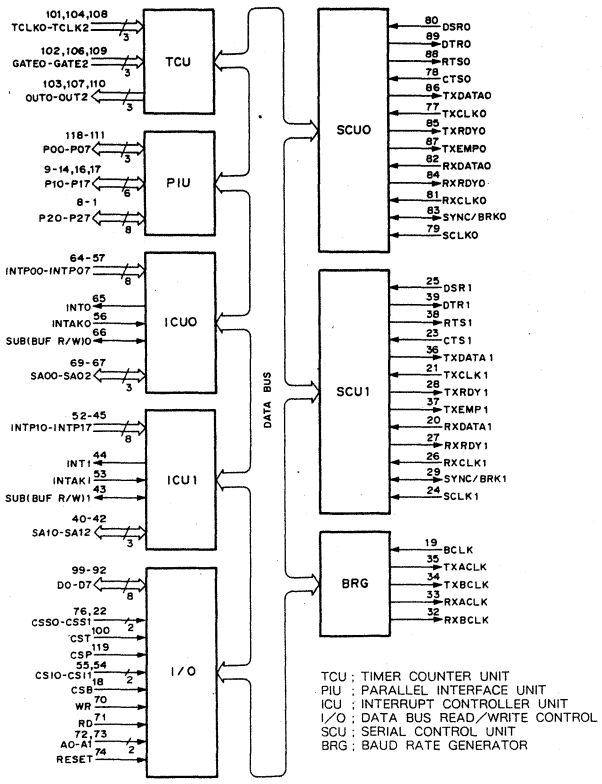

TCU ; TIMER COUNTER UNIT
PIU ; PARALLEL INTERFACE UNIT
ICU ; INTERRUPT CONTROLLER UNIT
I/O ; DATA BUS READ/WRITE CONTROL
SCU ; SERIAL CONTROL UNIT
BRG ; BAUD RATE GENERATOR

UPD71059GB-10-3B4 (NEC) FLAT PACKAGE
C-MOS INTERRUPT CONTROL UNIT
– TOP VIEW –

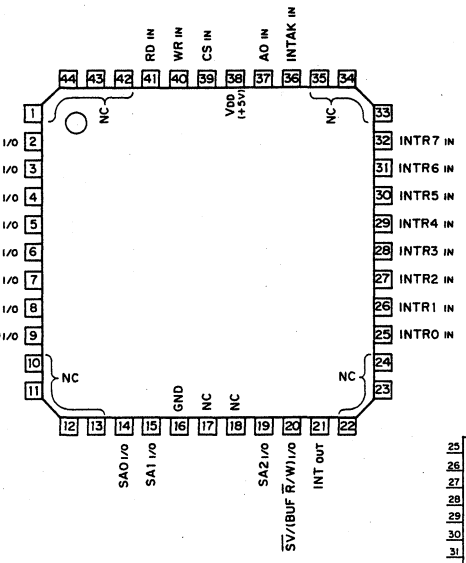

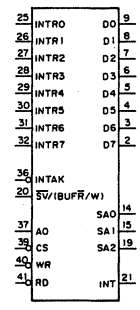

INTR0–INTR7 ; INTERRUPT REQUEST INPUTS
D0–D7 ; DATA BUS INPUTS/OUTPUTS
CS ; CHIP SELECT INPUT
RD ; READ STROBE INPUT
WR ; WRITE STROBE INPUT
A0 ; ADDRESS INPUT
INT ; INTERRUPT OUTPUT
INTAK ; INTERRUPT ACKNOWLEDGE INPUT
$\overline{SV}$/(BUF$\overline{R}$/W) ; CONTROLLED/BUFFER READ/WRITE INPUT/OUTPUT
SA0–SA2 ; CONTROLLED ADDRESS INPUTS/OUTPUTS

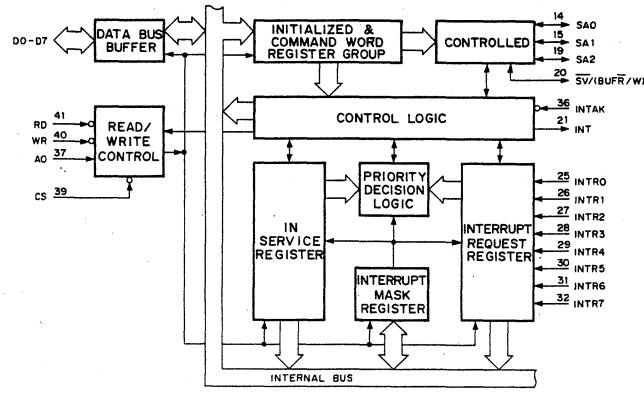

UPD72020GC-8-3B6 (NEC) FLAT PACKAGE

C-MOS GRAPHIC DISPLAY CONTROLLER
– TOP VIEW –

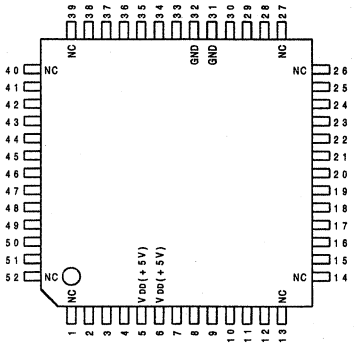

(VDD = +5V)

PIN No.	I/O	SIGNAL	PIN No.	I/O	SIGNAL	PIN No.	I/O	SIGNAL
1	-	NC	19	I	$\overline{WR}$	37	I/O	AD2
2	I/O	AD15/(LC2)	20	I	A0	38	I/O	AD3
3	O	A16/(LC3)/ [AT.BLINK-CLC]	21	I/O	DB0	39	-	NC
4	O	A17/(CSR-LC4)/ [CSR-IMAGE]	22	I/O	DB1	40	-	NC
5	-	VDD	23	I/O	DB2	41	I/O	AD4
6	-	VDD	24	I/O	DB3	42	I/O	AD5
7	-	IC	25	I/O	DB4	43	I/O	AD6
8	I	2×CCLK	26	-	NC	44	I/O	AD7
9	O	$\overline{DBIN}$	27	-	NC	45	I/O	AD8
10	O	HSYNC-REF	28	I/O	DB5	46	I/O	AD9
11	I/O	VSYNC/EX.SYNC	29	I/O	DB6	47	I/O	AD10
12	O	BLANK	30	I/O	DB7	48	I/O	AD11
13	-	NC	31	-	GND	49	I/O	AD12
14	-	NC	32	-	GND	50	I/O	AD13(LC0)
15	O	$\overline{RAS}$	33	-	IC	51	I/O	AD14(LC1)
16	O	DRQ/A18/(A13)/ [A16]	34	I	LPEN/WAIT/$\overline{DT}$	52	-	NC
17	I/O	$\overline{DACK}$/A19/(A14)/ [A17]	35	I/O	AD0			
18	I	$\overline{RD}$	36	I/O	AD1			

IC;Internally Connected,( );When Character mode, [ ];When Character/Graphic mix mode

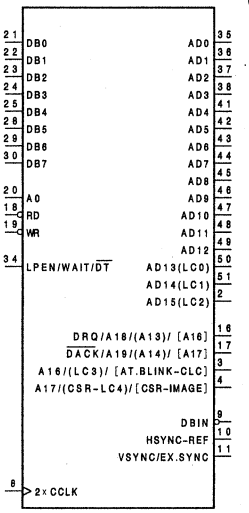

( );When Character mode,
[ ];When Character/Graphic mix mode

INPUT
- 2×CCLK ;2×CARACTER CLOCK
- A0 ;CPU ADDRESS BUS 0
- LPEN/WAIT/$\overline{DT}$;LIGHT-PEN STROBE/DRAWING-WAIT/ DATA TRASFER
- $\overline{RD}$;CPU READ STROBE
- $\overline{WR}$;CPU WRITE STROBE

OUTPUT
- [AT.BLINK-$\overline{CLC}$] ;ATTRIBUTE BLINK-CLEAR LINE COUNTER
- BLANK ;BLANKING SIGNAL
- [CSR-IMAGE] ;CURSOR-IMAGE
- (CSR-LC4) ;CURSOR-LINE COUNT 4
- $\overline{DBIN}$;DATA BUS IN
- DRQ ;DMA REQUEST
- HSYNC-REF ;HORIZONTAL SYNC-REFRESH TIMING
- (LC0 to LC3) ;LINE COUNT 0 to 3
- $\overline{RAS}$;ROW ADDRESS STROBE

INPUT/OUTPUT
- (A13),(A14), [A16], [A17], A18,A19 ;DISPLAY MEMORY ADDRESS
- AD0 to AD15 ;DISPLAY MEMORY ADDRESS/ DATA BUS 0 to 15
- $\overline{DACK}$;DMA ACKNOWLEDGE
- DB0 to DB7 ;CPU DATA BUS 0 to 7
- VSYNC/EX-SYNC ;VERTICAL SYNC(OUTPUT)/ EXTERNAL SYNC(INPUT)

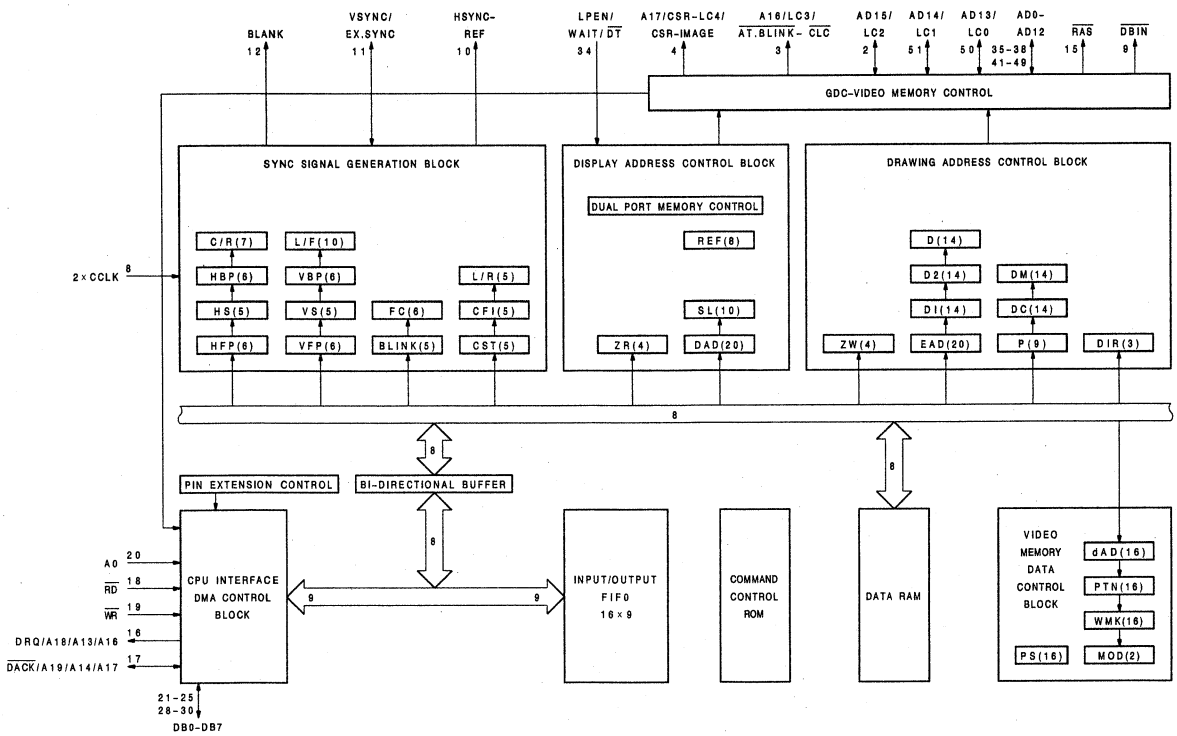

SECTION 7
SPARE PARTS

7-1. NOTES ON SPARE PARTS

(1) Safety Related Components Warning

Components marked with ⚠ on the schematic diagrams, exploded views and electrical spare parts list are critical to safe operation.
Replace these components with Sony parts whose part numbers appear in this manual or in service bulletins and service manual supplements published by Sony.

(2) Standardization of Parts

Repair parts supplied from Sony Parts Center may not be always identical with the parts which actually in use due to "accommodating the improved parts and/or engineering changes" or "standarzation of genuine parts".
This manual's exploded views and electrical spare parts list are indicating the part numbers of "the standardized genuine parts at present".

(3) Stock of Parts

Parts marked with "o" SP (Supply Code) column of the spare parts list are not normally required for routine service work. Orders for parts marked with "o" will be processed, but allow for additional delivery time.

(4) Units for Capacitors, Inductors and Resistors

The following units are assumed in schematic diagrams, electrical parts list and exploded views unless otherwise specified.

Capacitors : μF
Inductors : μH
Resistors : Ω

補修用部品注意事項

(1) 安全重要部品

回路図、分解図、電気部品表中、⚠印の部品は安全性を維持するために重要な部品です。従ってこれらの部品を交換するときには必ず指定の部品と交換して下さい。

(2) 部品の共通化

ソニーから供給される部品セットに実装されているものと異なることがあります。これは部品の共通化、改良等によるものです。
分解図や電気部品表には現時点での共通化された部品が記載されています。

(3) 部品の在庫

部品表のSP (Supply code) 欄に o で示される部品は交換頻度が低い部品ですので在庫していないことがあり、納期が長くなることがあります。

(4) コンデンサー、インダクター、抵抗の単位

回路図、分解図、電気部品表中、特に明記したものを除き、下記の単位は省略されています。

コンデンサー : μF
インダクター : μH
抵抗 : Ω

7-2. EXPLODED VIEWS AND PARTS

CABINET AND KEY ASSY

No.	Part No.	SP	Description
1	X-3678-029-3	o	PANEL ASSY, KEY
2	X-3678-031-1	o	KNOB ASSY
3	X-3678-032-1	s	DIAL, ASSY
4	X-3678-034-1	o	BOARD,BOTTOM ASSY
5	1-466-955-11	s	ENCODER, ROTARY
6	1-467-523-11	s	ENCODER, ROTARY
7	1-467-524-11	o	KEY BOARD UNIT
8	1-544-578-11	s	SPEAKER
9	1-571-655-21	o	SWITCH, TACTIL
10	1-650-074-11	s	PRINTED CIRCUIT BOARD, KY-147
11	1-650-078-11	s	PRINTED CIRCUIT BOARD, VR-154
12	1-650-079-11	s	PRINTED CIRCUIT BOARD, VR-181
13	1-650-080-11	s	PRINTED CIRCUIT BOARD, LED-160
14	3-179-110-01	s	COVER, DIAL
15	3-678-367-02	o	BOARD, TOP
16	3-678-369-02	o	PANEL, REAR
17	3-678-374-02	o	PLATE, GROUND (KY)
18	3-678-377-01	o	PLATE,ENCODER
19	3-678-382-01	o	BRACKET, KY
20	3-678-389-01	o	CLAMP, SPEAKER
21	3-678-478-01	o	PLATE, GROUND (TB)
22	4-928-315-81	s	KEY TOP

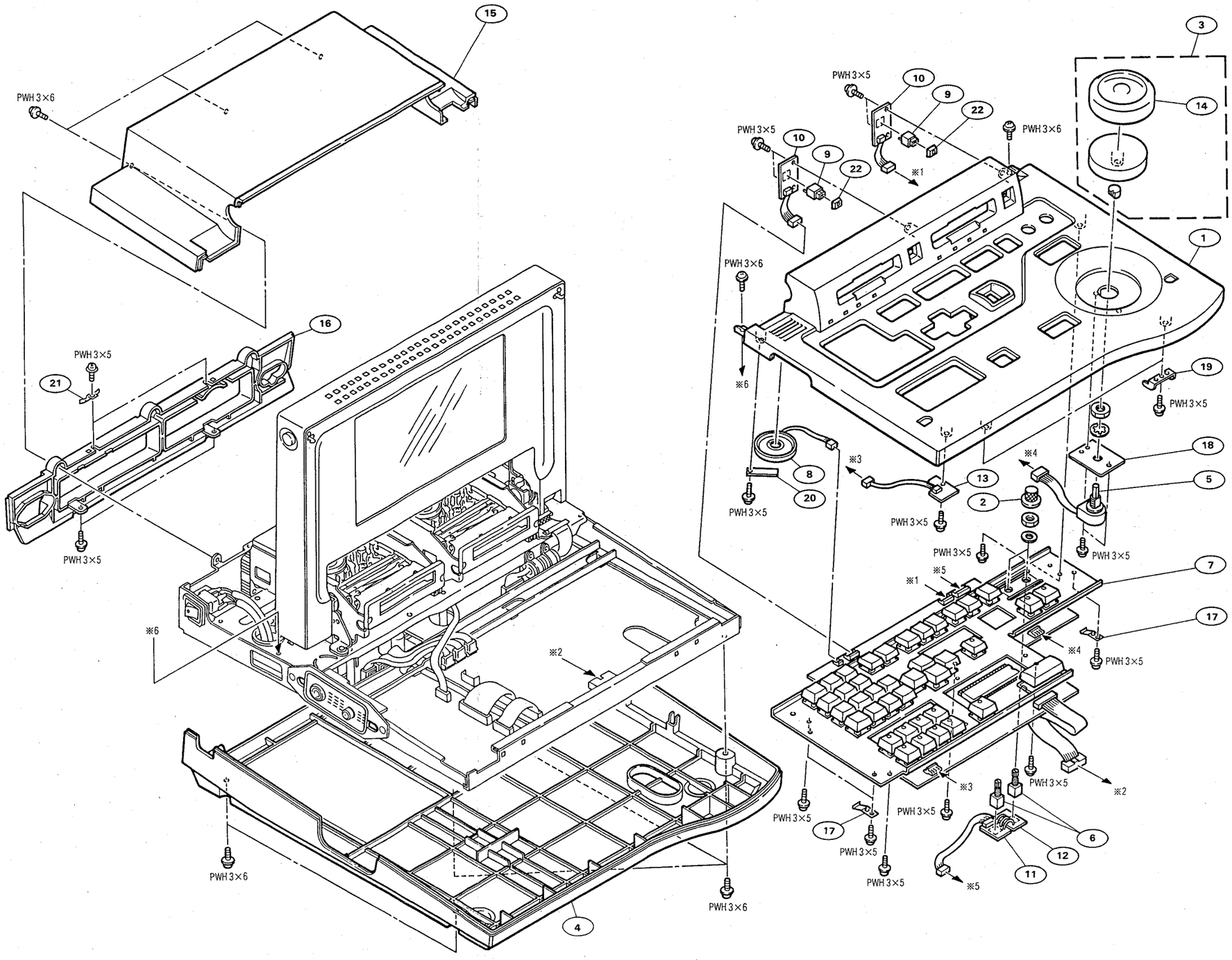

7-2

DISPLAY ASSY

No.	Part No.	SP	Description
101	X-3678-030-3	o	PANEL(DP), FRONT ASSY
102	X-3678-033-2	o	PANEL(DP), REAR ASSY
103	1-466-954-11	s	DISPLAY UNIT, EL
104	1-500-082-11	s	FILTER, CLAMP (FERRITE CORE)
105	1-570-028-11	s	SWITCH, MICRO
106	1-952-582-11	o	HARNESS, SUB (EL)
107	3-351-878-01	s	FOOT, RUBBER
108	3-672-420-00	o	CLAMP (T=1.6)
109	3-678-363-01	o	LOCK CLAW
110	3-678-370-01	o	BUTTON(DP), LOCK
111	3-678-371-02	o	UNIT, TILT(L)
112	3-678-373-02	o	DP PLATE, SHIELD
113	3-678-378-02	o	ROLLER(A), HARNESS
114	3-678-379-02	o	ROLLER(B), HARNESS
115	3-678-384-01	o	LID(DP) L, KNOB
116	3-678-387-01	o	TABLE(DP), BUTTON
117	3-678-388-02	o	COVER, SHAFT
118	3-678-389-01	o	CLAMP, SPEAKER
119	3-678-391-02	o	UNIT, TILT(R)
120	3-678-479-01	o	PLATE, SIELD (DPF)
121	3-183-850-01	s	NYLON RIVET DIA. 4x7
122	4-861-930-01	s	SPRING, COMPRESSION

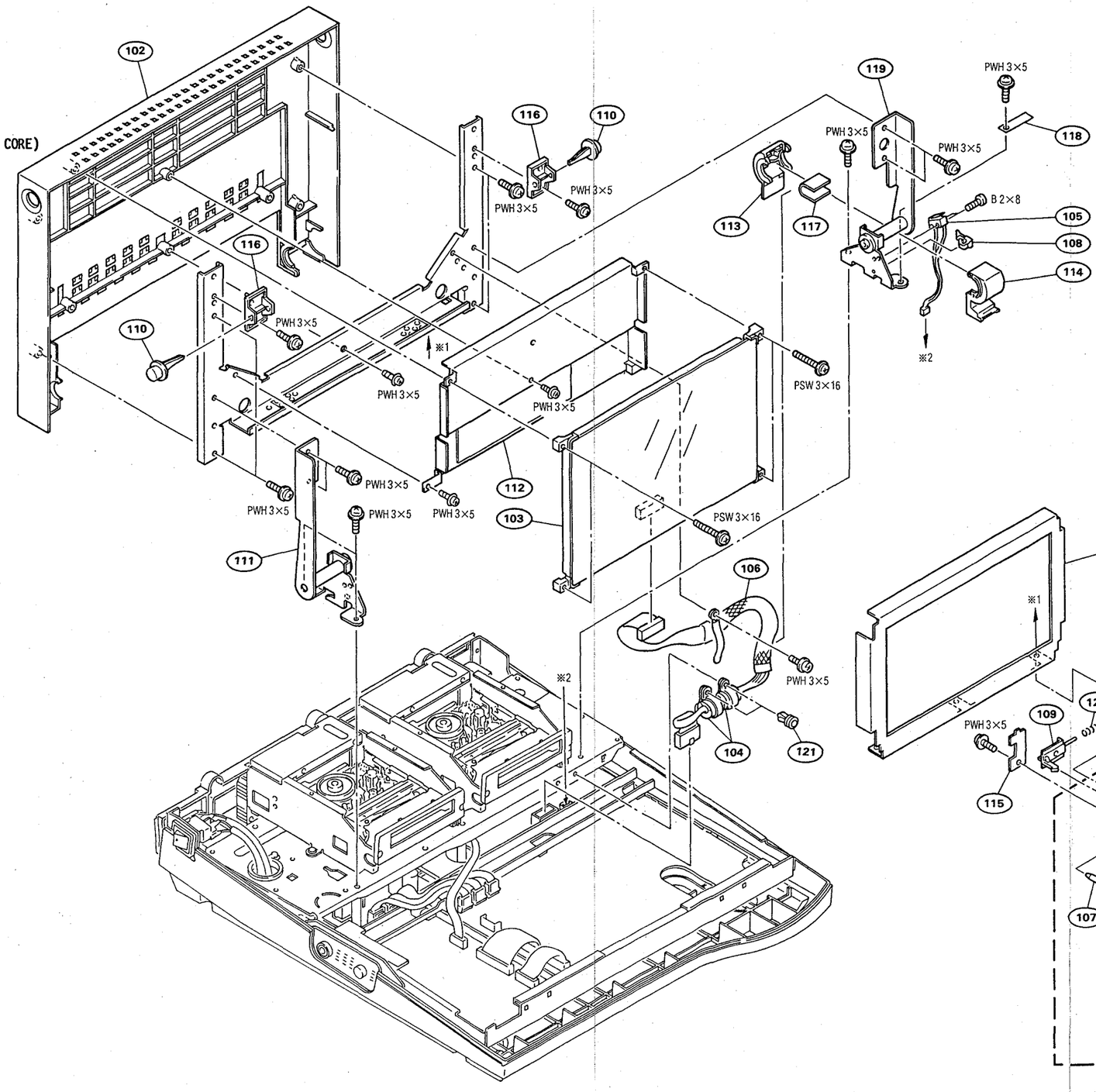

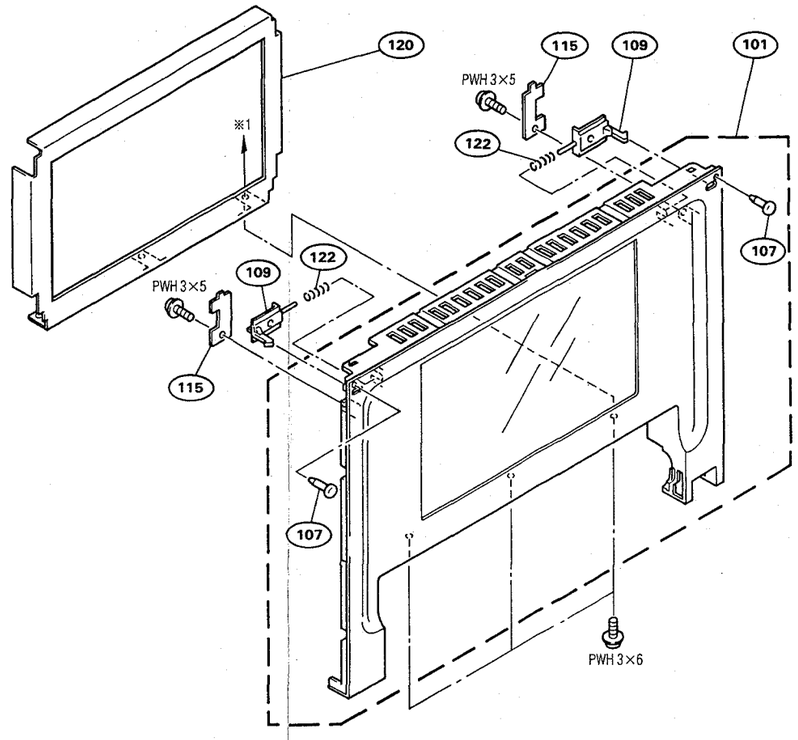

MAIN CHASSIS ASSY

No.	Part No.	SP	Description
201	A-8267-997-A	s	DECK(PLAYER) ASSY, MECHANICAL (MT-PCM-E7700 P-103)
202	A-8267-999-A	s	DECK(RECORDER) ASSY, MECHANICAL (MT-PCM-E7700 R-103)
203	A-8275-316-A	o	COMPLETE PCB, SSP-8
204	A-8275-317-A	o	COMPLETE PCB, ADA-31
205	X-2068-004-1	s	TERMINAL ASSY
206	X-3678-031-1	o	KNOB ASSY
207	⚠1-251-148-11	s	INLET, AC(3P)
208	⚠1-413-647-11	s	SWITCHING REGURATOR
209	1-500-082-11	s	FILTER, CLAMP (FERRITE CORE)
210	1-532-827-11	s	FUSE (MT4-3A-N1)
211	1-543-793-11	s	FILTER, CLAMP (FERRITE CORE)
212	⚠1-560-764-21	o	TERMINAL, SOLDERLESS
	⚠1-562-817-11	o	HOUSING, CONNECTOR 2P
213	⚠1-565-787-21	o	CONTACT, RECEPTACLE 1P
214	⚠1-570-455-11	s	SWITCH, AC POWER SEESAW
215	1-650-075-11	s	PRINTED CIRCUIT BOARD, HP-57
216	1-650-076-11	s	PRINTED CIRCUIT BOARD, CP-233
217	1-650-077-11	s	PRINTED CIRCUIT BOARD, CP-234
218	1-698-239-11	s	MOTOR, DC FAN
219	2-068-008-00	s	WASHER
220	3-673-910-00	o	SCREW, CONNECTOR
221	3-678-356-01	o	COVER, SW REG
222	3-678-376-01	o	BRACKET, JACK
223	3-678-380-01	o	PLATE, MASKING(JACK)
224	3-692-461-11	o	NUT, PLATE
225	3-694-225-01	o	CLAMP
226	3-723-749-01	o	BUSHING, SNAP
227	4-818-403-00	s	RIVET, NYLON
228	3-183-850-01	s	NYLON RIVET DIA. 4x7

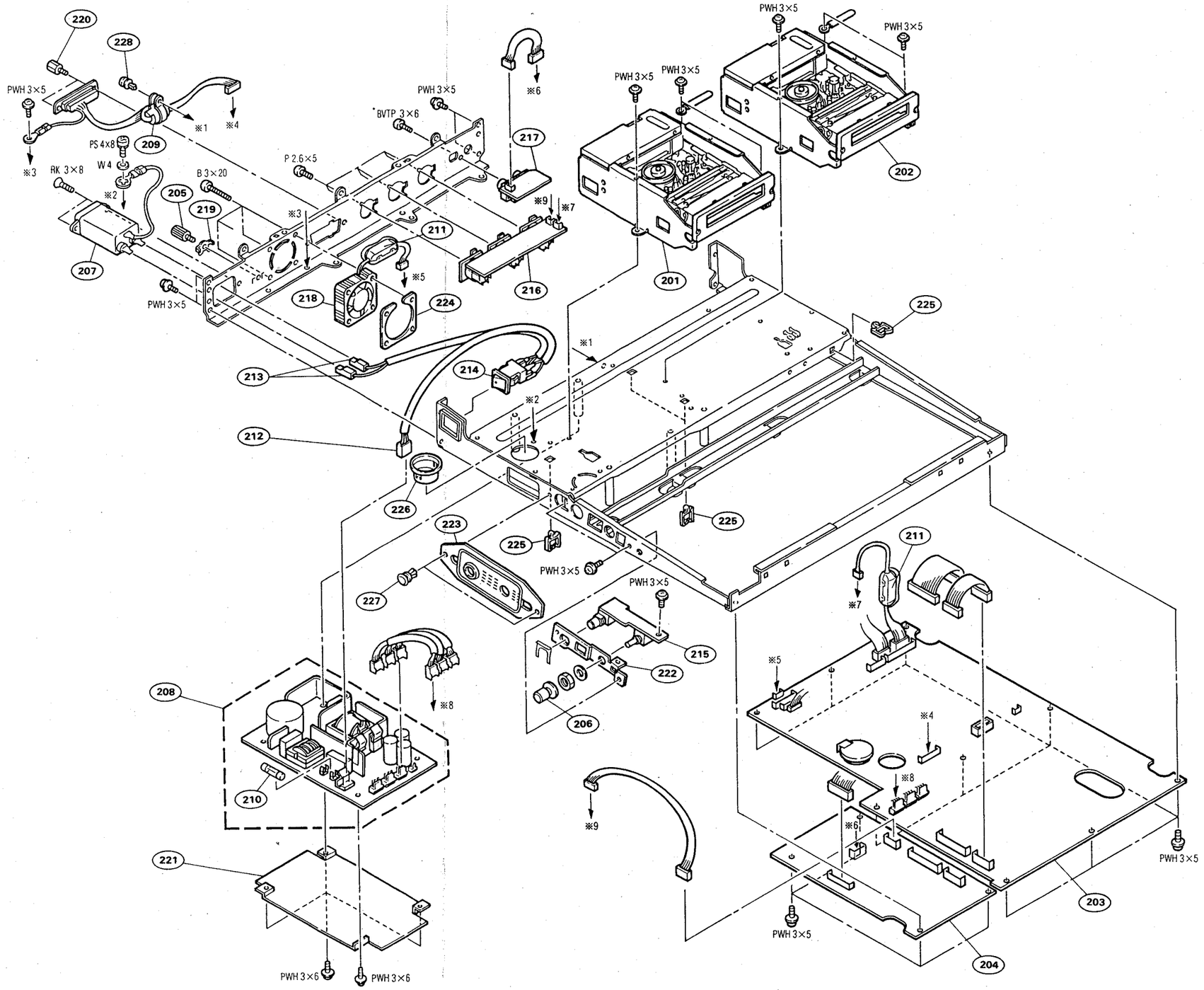

7-4

MECHANICAL DECK (PLAYER AND RECORDER) ASSY
CASE SECTION

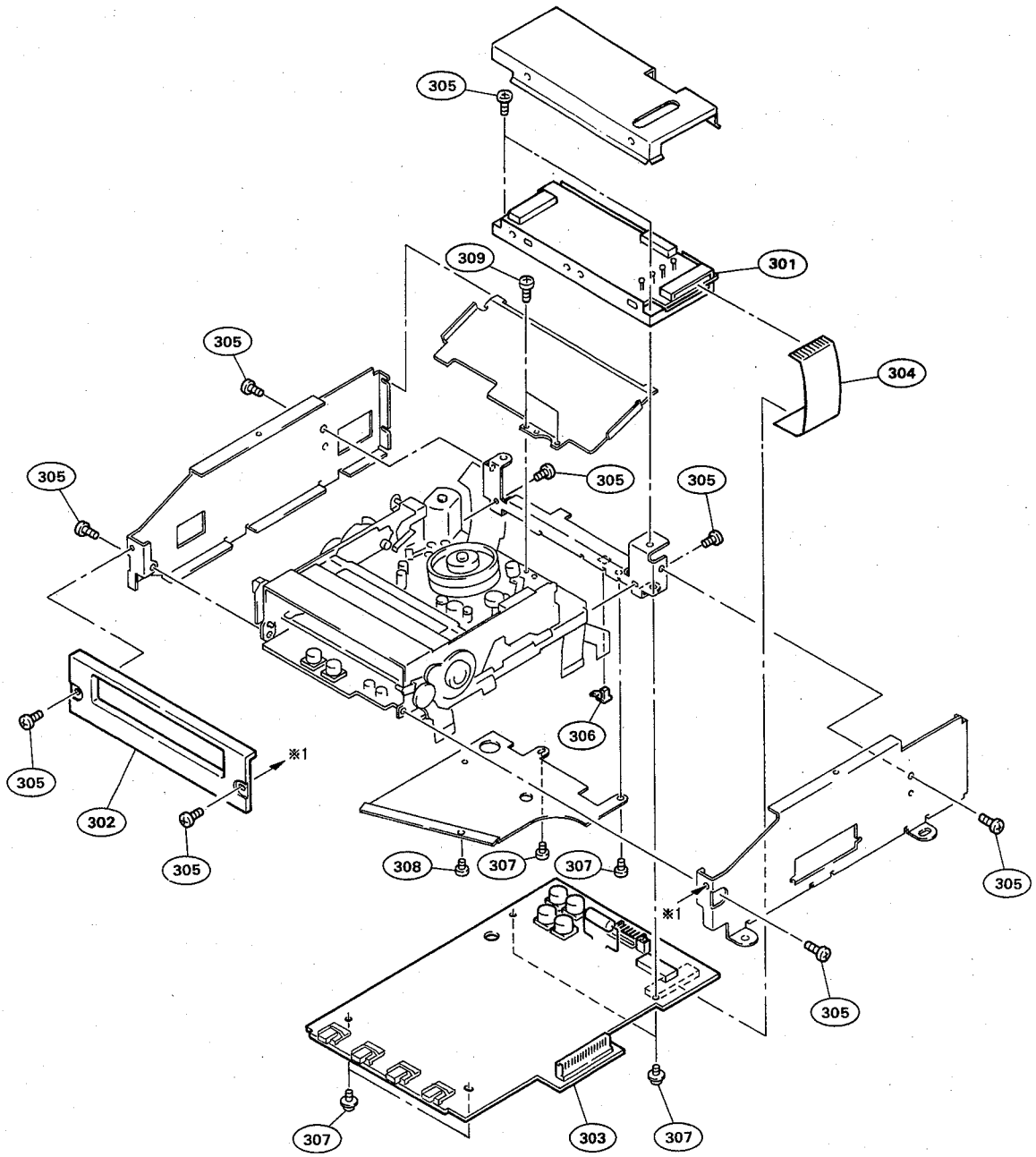

No.	Part No.	SP	Description
301	A-8310-132-A	o	RF-53 ASSY(RP)
302	A-8267-753-B	o	WINDOW ASSY, CASSETTE
303	A-8310-133-A	o	MOUNTED CIRCUIT BOARD, SV-147
304	1-764-402-11	s	WIRE, FLEXIBLE CARD(1.00MM)18P
305	3-374-615-11	s	SCREW(M2), BIND
306	3-671-150-11	o	CLAMP
307	3-703-502-21	s	SCREW
308	7-627-850-08	s	SCREW,PRECISION +P 1.4X2
309	7-627-850-47	s	SCREW,PRECISION +P 1.4X1.6

CASSETTE COMPARTMENT SECTION

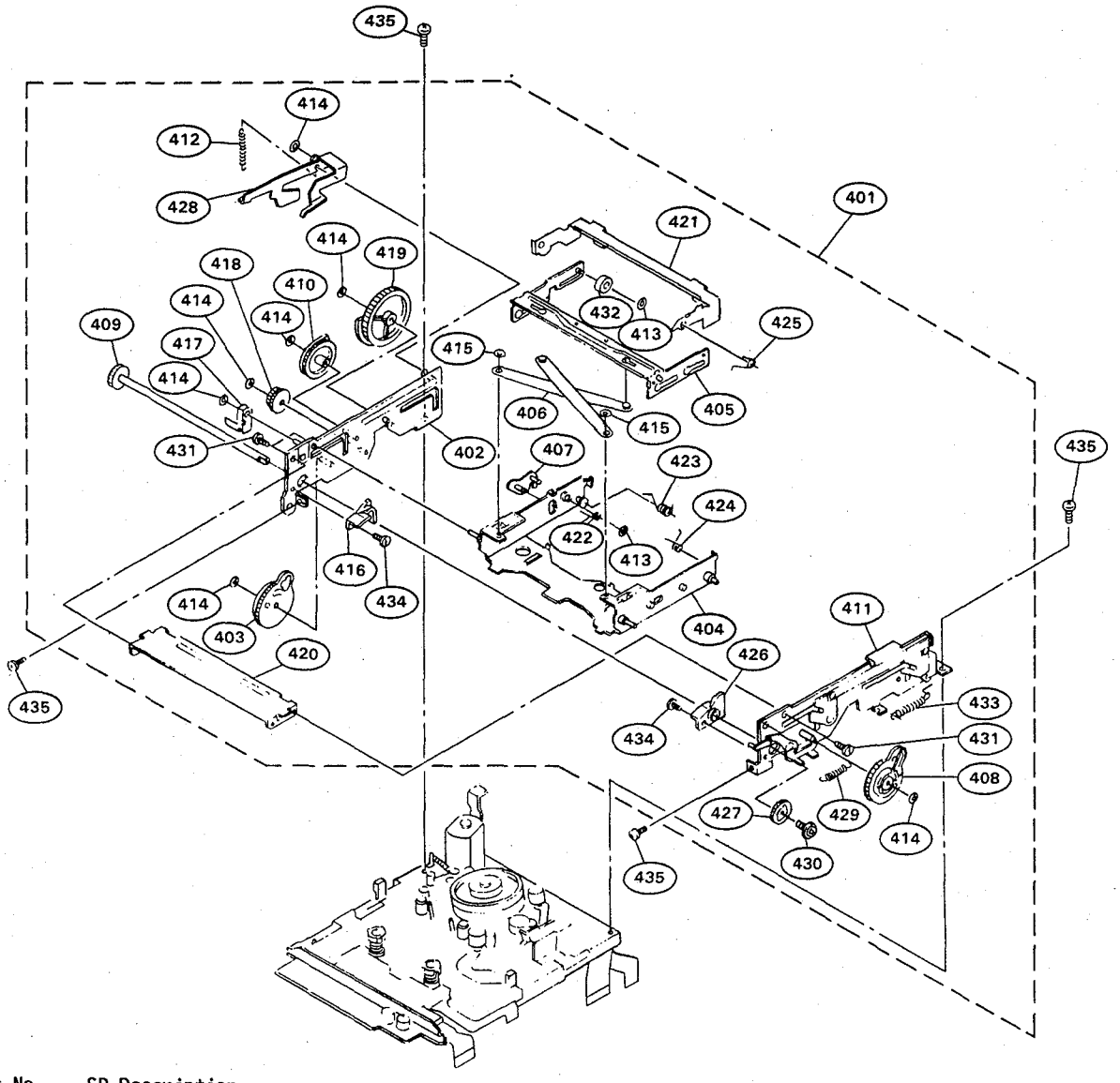

No.	Part No.	SP	Description
401	A-8267-998-A	s	CASSETTE COMPARTMENT ASSY
402	X-3363-985-5	s	PLATE (LEFT) ASSY, SIDE
403	X-3363-986-2	s	GEAR (LEVER LEFT) ASSY
404	X-3363-987-1	s	HOLDER ASSY, CASSETTE
405	X-3363-989-5	s	SLIDER (CASSETTE) ASSY
406	X-3363-990-1	s	LEVER ASSY, X
407	X-3363-991-3	s	LEVER ASSY, SLIDER LOCK
408	X-3363-995-2	s	GEAR (LEVER RIGHT) ASSY
409	X-3363-996-1	s	GEAR (JOINT) ASSY
410	X-3366-603-1	s	GEAR (C3) ASSY
411	X-3367-014-1	s	PLATE (RIGHT) ASSY, SIDE
412	3-140-263-99	s	SPRING, TENSION
413	3-321-393-01	s	WASHER, STOPPER
414	3-341-752-11	s	WASHER, POLYETHYLENE
415	3-341-753-11	s	WASHER, POLYETHYLENE
416	3-374-680-01	s	GUIDE (CASSETTE LEFT)
417	3-374-681-01	s	LEVER (SWITCH)
418	3-374-686-01	s	GEAR
419	3-374-688-01	s	GEAR (C2)
420	3-374-689-01	s	PLATE, JOINT

No.	Part No.	SP	Description
421	3-374-713-01	s	LEVER (CASSETTE)
422	3-374-720-01	s	SPRING (SLIDER LOCK), TORSION
423	3-374-721-02	s	SPRING (SLIDER RETURN),TORSION
424	3-374-722-01	s	SPRING (LID ARM), TORSION
425	3-374-723-01	s	SPRING(CASSETTE LEVER),TORSION
426	3-374-734-01	s	GUIDE (CASSETTE RIGHT)
427	3-374-739-01	s	GEAR (JOINT RIGHT)
428	3-388-228-02	s	LEVER (LID UP)
429	3-561-628-00	s	SPRING, TENSION
430	3-703-502-11	s	SCREW
431	3-703-816-31	s	SCREW (M1.4X1.6), SPECIAL HEAD
432	3-904-008-01	s	ROLLER
433	4-858-478-00	s	SPRING, TENSION
434	7-627-850-27	s	SCREW,PRECISION +P 1.4X3
435	7-627-850-47	s	SCREW,PRECISION +P 1.4X1.6

MECHANISM DECK SECTION (1)

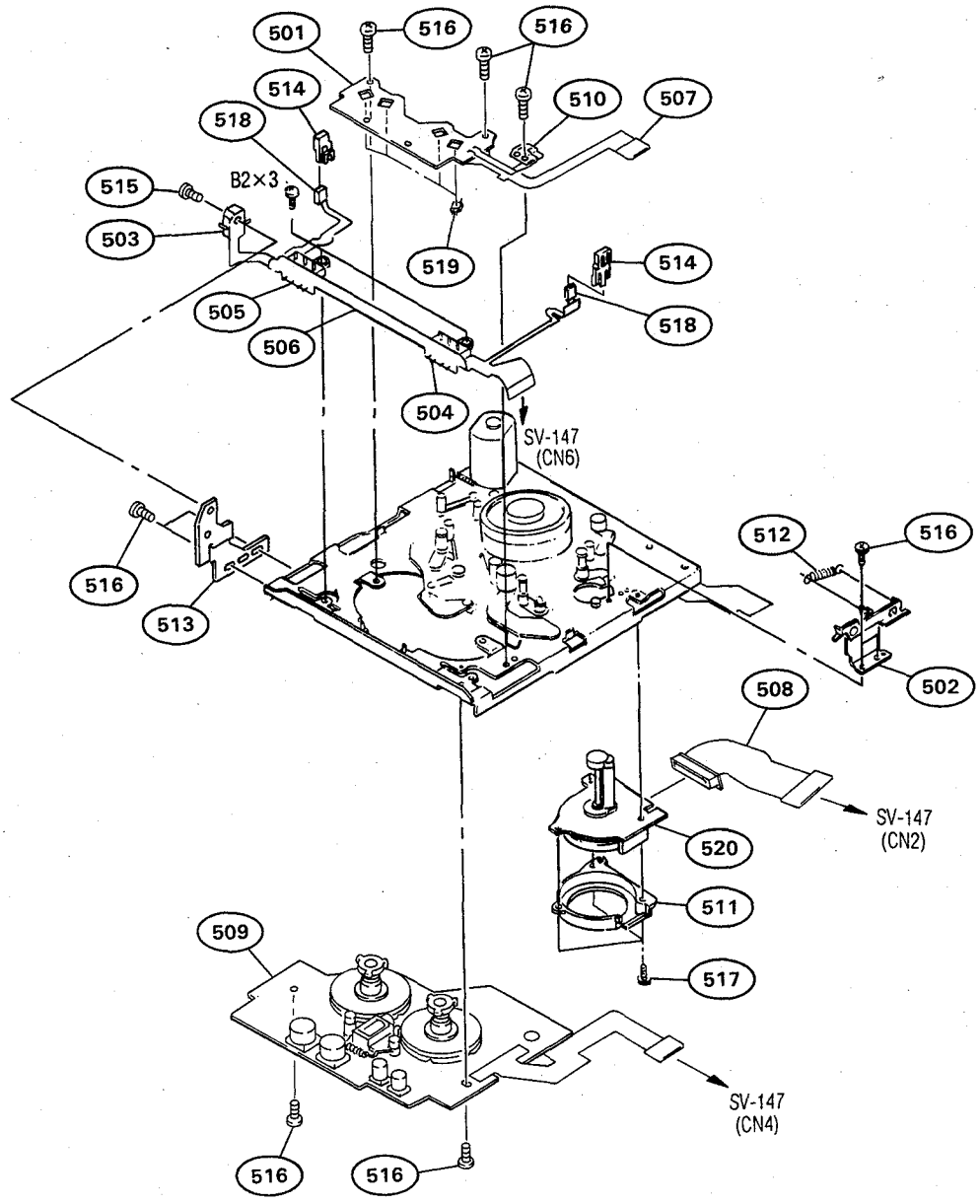

No.	Part No.	SP	Description
501	A-8276-769-A	o	MOUNTED CIRCUIT BOARD, REEL FG
502	X-3363-984-1	s	ARM ASSY, LID
503	1-570-771-11	s	SWITCH
504	1-572-950-11	s	SWITCH, PUSH
505	1-572-951-11	s	SWITCH, PUSH
506	1-642-056-12	s	PRINTED CIRCUIT BOARD, RECOGNI END FLEXIBLE
507	1-648-978-11	s	PRINTED CIRCUIT BOARD, REEL FG.DEW FLEXIBLE
508	1-648-979-11	s	PRINTED CIRCUIT BOARD, CAPSTAN FLEXIBLE
509	1-698-227-11	s	MOTOR, REEL
510	1-809-544-12	s	SENSOR, DEW CONDENSATION
511	3-374-654-01	s	COVER (MOTOR)
512	3-374-672-01	s	SPRING, TENSION
513	3-374-673-01	s	BRACKET (SWITCH)
514	3-374-674-01	s	HOLDER (ES)
515	7-627-553-67	s	SCREW,PRECISION +P 2X5
516	7-627-850-08	s	SCREW,PRECISION +P 1.4X2
517	7-627-850-27	s	SCREW,PRECISION +P 1.4X3
518	8-729-907-25	s	PHOTO TRANSISTOR PT4850F
519	8-759-057-48	s	PHOTO REFLECTOR NJL5803K-F10
520	8-835-329-12	s	MOTOR, DC U-21A

MECHANISM DECK SECTION (2)

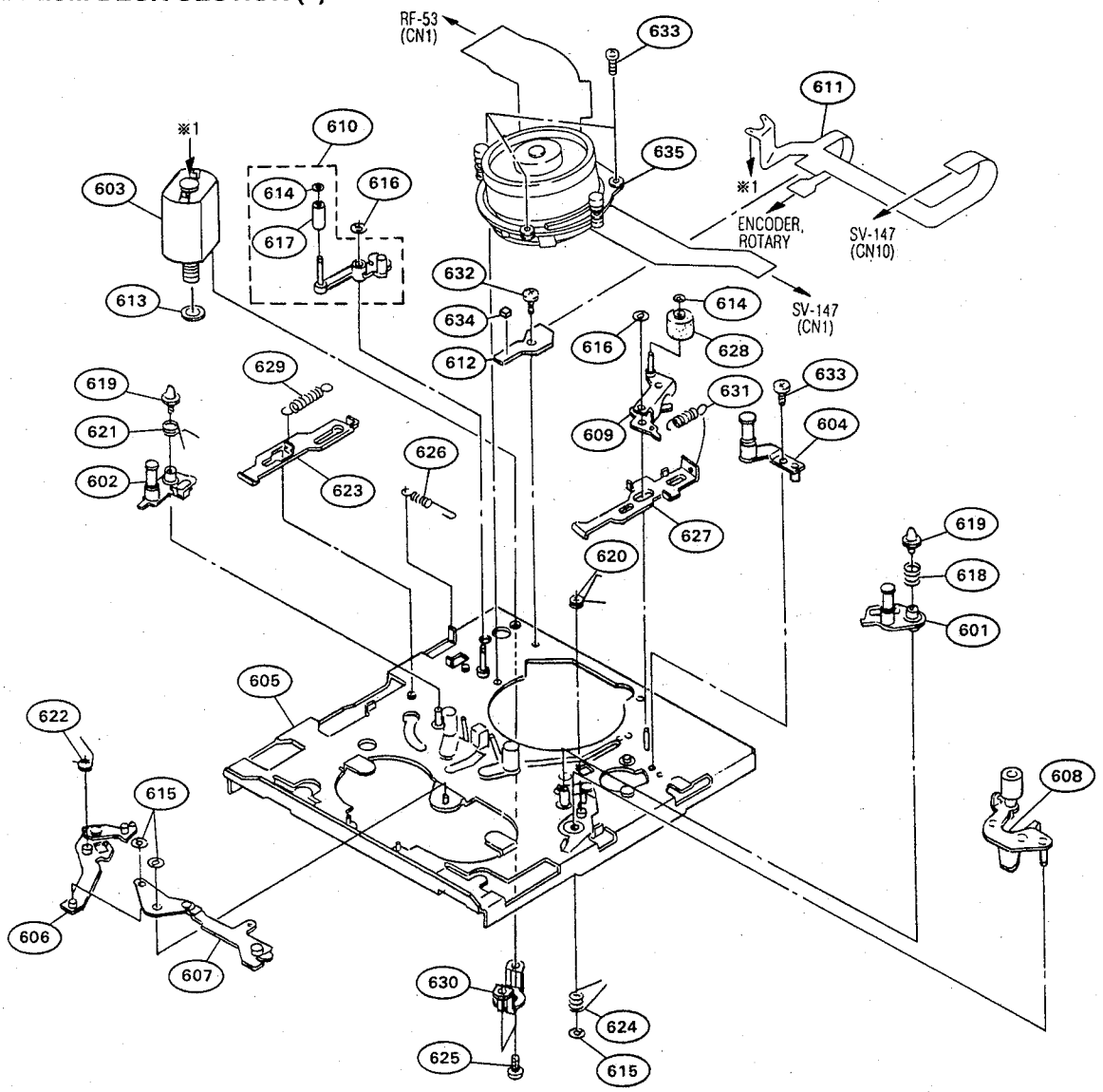

No.	Part No.	SP	Description
601	A-8267-743-A	s	ROLLER ASSY, RG
602	A-8267-744-A	s	ROLLER ASSY, LG
603	A-8267-759-A	s	MOTOR ASSY, DRIVE
604	A-8267-761-A	s	GUIDE ASSY, ROLLER
605	X-3363-963-1	o	CHASSIS ASSY
606	X-3363-965-1	s	LEVER ASSY, CAM
607	X-3363-966-1	s	LEVER ASSY, LR
608	X-3363-976-1	s	PINCH ROLLER ASSY
609	X-3363-983-1	s	ARM ASSY, CR
610	X-3366-602-1	s	TENSION REGULATOR ASSY
611	1-648-976-11	s	PRINTED CIRCUIT BOARD, TENTEGI MOTER ENCODER FLEXIBLE
612	1-648-982-11	o	PRINTED CIRCUIT BOARD, TENREGI
613	3-320-354-01	s	WASHER
614	3-321-393-01	s	WASHER, STOPPER
615	3-341-752-11	s	WASHER, POLYETHYLENE
616	3-341-753-11	s	WASHER, POLYETHYLENE
617	3-360-866-01	s	ROLLER (TENSION REGULATOR)
618	3-374-604-01	s	SPRING, COMPRESSION
619	3-374-605-01	s	SHAFT (CASSETTE)
620	3-374-606-01	s	SPRING (R), TORSION
621	3-374-608-01	s	SPRING (LF), TORSION
622	3-374-609-03	s	SPRING (L), TORSION
623	3-374-610-02	s	SLIDER
624	3-374-635-01	s	SPRING (P), TORSION
625	3-374-657-01	s	SCREW (M2X2)
626	3-374-662-01	s	SPRING, TENSION
627	3-374-665-01	s	SLIDER, CR
628	3-375-727-01	s	ROLLER (HC)
629	3-375-728-01	s	SPRING, TENSION
630	3-379-832-01	s	RETAINER, THRUST
631	3-570-776-01	s	SPRING, TENSION
632	7-627-850-08	s	SCREW,PRECISION +P 1.4X2
633	7-627-850-27	s	SCREW,PRECISION +P 1.4X3
634	8-719-821-03	s	ELEMENT, HALL THS117
635	8-848-611-11	s	DRUM ASSY DOU-21A-R (For MT-PCM-E7700 P-103,PLAYER)
	8-848-612-11	s	DRUM ASSY DOU-22A-R (For MT-PCM-E7700 R-103,RECORDER)

MECHANISM DECK SECTION (3)

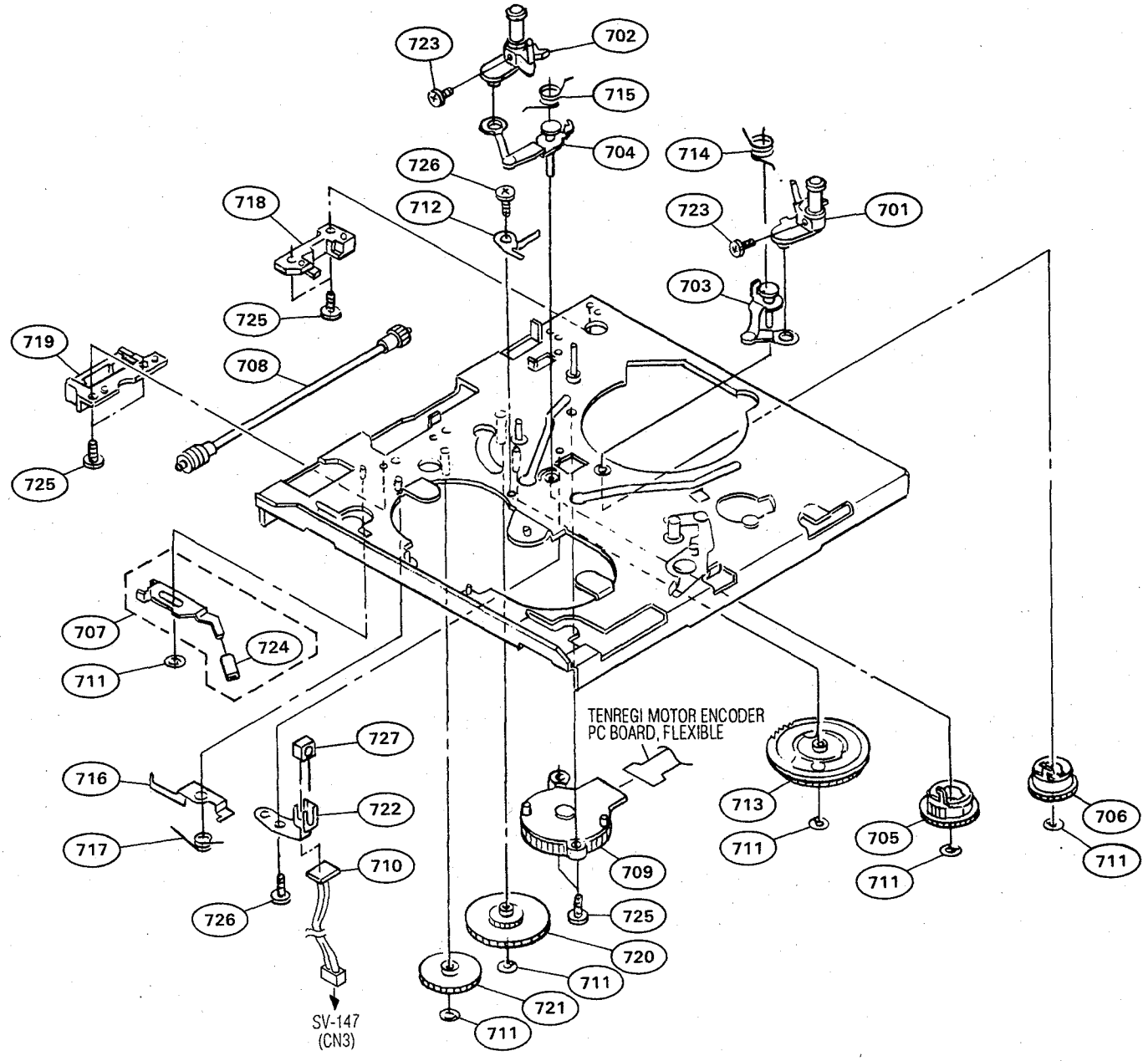

No.	Part No.	SP	Description
701	X-3363-969-1	s	ROLLER ASSY, SLANT GUIDE (T)
702	X-3363-972-3	s	ROLLER ASSY, SLANT GUIDE (S)
703	X-3363-974-1	s	ARM (T) ASSY, LOADING
704	X-3363-975-1	s	ARM (S) ASSY, LOADING
705	X-3363-978-1	s	GEAR (S) ASSY, LOADING
706	X-3363-979-3	s	GEAR (T) ASSY, LOADING
707	X-3363-980-1	s	PLATE ASSY, SPOOL, REEL
708	X-3363-981-1	s	GEAR ASSY, DRIVE
709	1-466-670-21	s	ENCODER, ROTARY
710	1-642-088-11	o	PRINTED CIRCUIT BOARD, GOMA
711	3-341-753-11	s	WASHER, POLYETHYLENE
712	3-374-628-02	s	PLATE, LOAD, PRE
713	3-374-636-01	s	GEAR, CAM
714	3-374-641-01	s	SPRING (T), TORSION
715	3-374-642-02	s	SPRING (S), TORSION
716	3-374-645-01	o	RETAINER, SPOOL PLATE
717	3-374-646-01	s	SPRING (SPOOL PLATE), TORSION
718	3-374-647-01	s	RETAINER (A), DRIVE SHAFT
719	3-374-648-01	s	RETAINER (B), DRIVE SHAFT
720	3-374-652-01	s	GEAR (M2)
721	3-374-653-01	s	GEAR (MD WHEEL)
722	3-374-655-01	s	BRACKET (LED)
723	3-704-246-31	s	SCREW (P1.4X2.5)
724	4-866-397-00	o	CUSHION, LED
725	7-627-850-27	s	SCREW,PRECISION +P 1.4X3
726	7-627-850-47	s	SCREW,PRECISION +P 1.4X1.6
727	8-719-988-42	s	DIODE GL453S

7-3. ELECTRICAL PARTS LIST

CAPACITOR, CHIP CERAMIC

Part No.	SP	Description			
1-163-019-00	s	CAP, CHIP CERAMIC	6800pF	10%	50V
1-163-038-00	s	CAP, CHIP CERAMIC	0.1		50V
1-163-125-00	s	CAP, CHIP CERAMIC	220pF	5%	50V
1-163-127-00	s	CAP, CHIP CERAMIC	270pF	5%	50V
1-163-131-00	s	CAP, CHIP CERAMIC	390pF	5%	50V
1-163-133-00	s	CAP, CHIP CERAMIC	470pF	5%	50V
1-163-227-11	s	CAP, CHIP CERAMIC	10pF	5%	50V
1-163-229-11	s	CAP, CHIP CERAMIC	12pF	5%	50V
1-163-235-11	s	CAP, CHIP CERAMIC	22pF	5%	50V
1-163-239-11	s	CAP, CHIP CERAMIC	33pF	5%	50V
1-163-243-11	s	CAP, CHIP CERAMIC	47pF	5%	50V
1-163-251-11	s	CAP, CHIP CERAMIC	100pF	5%	50V
1-163-257-11	s	CAP, CHIP CERAMIC	180pF	5%	50V
1-163-275-11	s	CAP, CHIP CERAMIC	0.001	5%	50V
1-163-833-00	s	CAP, CHIP CERAMIC	0.068		25V

CAPACITOR, CHIP TANTALUM

Part No.	SP	Description			
1-135-073-00	s	CAP, CHIP TANTALUM	0.33	10%	35V
1-135-208-11	s	CAP, CHIP TANTALUM	1	20%	10V
1-135-217-21	s	CAP, CHIP TANTALUM	15	20%	6.3V
1-135-227-11	s	CAP, CHIP TANTALUM	100	20%	6.3V
1-135-259-11	s	CAP, CHIP TANTALUM	10	20%	6.3V

RESISTOR, CHIP

Part No.	SP	Description			
1-216-001-00	s	RES, CHIP	10	5%	1/10W
1-216-009-00	s	RES, CHIP	22	5%	1/10W
1-216-017-00	s	RES, CHIP	47	5%	1/10W
1-216-021-00	s	RES, CHIP	68	5%	1/10W
1-216-025-00	s	RES, CHIP	100	5%	1/10W
1-216-029-00	s	RES, CHIP	150	5%	1/10W
1-216-033-00	s	RES, CHIP	220	5%	1/10W
1-216-035-00	s	RES, CHIP	270	5%	1/10W
1-216-037-00	s	RES, CHIP	330	5%	1/10W
1-216-039-00	s	RES, CHIP	390	5%	1/10W
1-216-041-00	s	RES, CHIP	470	5%	1/10W
1-216-049-00	s	RES, CHIP	1K	5%	1/10W
1-216-051-00	s	RES, CHIP	1.2K	5%	1/10W
1-216-055-00	s	RES, CHIP	1.8K	5%	1/10W
1-216-057-00	s	RES, CHIP	2.2K	5%	1/10W
1-216-063-00	s	RES, CHIP	3.9K	5%	1/10W
1-216-065-00	s	RES, CHIP	4.7K	5%	1/10W
1-216-073-00	s	RES, CHIP	10K	5%	1/10W
1-216-075-00	s	RES, CHIP	12K	5%	1/10W
1-216-077-00	s	RES, CHIP	15K	5%	1/10W
1-216-079-00	s	RES, CHIP	18K	5%	1/10W
1-216-081-00	s	RES, CHIP	22K	5%	1/10W
1-216-083-00	s	RES, CHIP	27K	5%	1/10W
1-216-085-00	s	RES, CHIP	33K	5%	1/10W
1-216-089-91	s	RES, CHIP	47K	5%	1/10W
1-216-095-00	s	RES, CHIP	82K	5%	1/10W
1-216-097-00	s	RES, CHIP	100K	5%	1/10W
1-216-103-91	s	RES, CHIP	180K	5%	1/10W
1-216-113-00	s	RES, CHIP	470K	5%	1/10W
1-216-121-00	s	RES, CHIP	1.0M	5%	1/10W
1-216-308-00	s	RES, CHIP	4.7	5%	1/10W

ADA-31 BOARD

Ref. No. or Q'ty	Part No.	SP	Description
1pc	A-8275-317-A	o	MOUNTED CIRCUIT BOARD, ADA-31
(This assembly includes the following parts.)			
C1	1-124-589-11	s	ELECT 47uF 20% 16V
C13	1-124-261-00	s	ELECT 10uF 20% 50V
C14	1-124-261-00	s	ELECT 10uF 20% 50V
C20	1-126-157-11	s	ELECT 10uF 20% 16V
C21	1-126-157-11	s	ELECT 10uF 20% 16V
C24	1-126-157-11	s	ELECT 10uF 20% 16V
C25	1-124-234-00	s	ELECT 22uF 20% 16V
C101	1-164-085-11	s	CERAMIC 1000pF 10% 50V
C102	1-124-282-00	s	ELECT, NONPOLAR 22uF 20% 25V
C103	1-124-282-00	s	ELECT, NONPOLAR 22uF 20% 25V
C105	1-164-085-11	s	CERAMIC 1000pF 10% 50V
C118	1-126-096-11	s	ELECT 10uF 20% 35V
C121	1-124-282-00	s	ELECT, NONPOLAR 22uF 20% 25V
C123	1-126-163-11	s	ELECT 4.7uF 20% 50V
C124	1-164-232-11	s	CERAMIC, CHIP 0.01uF 10% 100V
C125	1-164-232-11	s	CERAMIC, CHIP 0.01uF 10% 100V
C201	1-164-085-11	s	CERAMIC 1000pF 10% 50V
C202	1-124-282-00	s	ELECT, NONPOLAR 22uF 20% 25V
C203	1-124-282-00	s	ELECT, NONPOLAR 22uF 20% 25V
C205	1-164-085-11	s	CERAMIC 1000pF 10% 50V
C218	1-126-096-11	s	ELECT 10uF 20% 35V
C221	1-124-282-00	s	ELECT, NONPOLAR 22uF 20% 25V
C223	1-126-163-11	s	ELECT 4.7uF 20% 50V
C224	1-164-232-11	s	CERAMIC, CHIP 0.01uF 10% 100V
C225	1-164-232-11	s	CERAMIC, CHIP 0.01uF 10% 100V
C309	1-124-282-00	s	ELECT, NONPOLAR 22uF 20% 25V
C310	1-164-232-11	s	CERAMIC, CHIP 0.01uF 10% 100V
C312	1-164-085-11	s	CERAMIC 1000pF 10% 50V
C409	1-124-282-00	s	ELECT, NONPOLAR 22uF 20% 25V
C410	1-164-232-11	s	CERAMIC, CHIP 0.01uF 10% 100V
C412	1-164-085-11	s	CERAMIC 1000pF 10% 50V
C501	1-126-096-11	s	ELECT 10uF 20% 35V
C503	1-124-282-00	s	ELECT, NONPOLAR 22uF 20% 25V
C504	1-124-282-00	s	ELECT, NONPOLAR 22uF 20% 25V
C505	1-126-096-11	s	ELECT 10uF 20% 35V
C507	1-126-163-11	s	ELECT 4.7uF 20% 50V
C508	1-164-232-11	s	CERAMIC, CHIP 0.01uF 10% 100V
C510	1-126-096-11	s	ELECT 10uF 20% 35V
C511	1-164-232-11	s	CERAMIC, CHIP 0.01uF 10% 100V
C514	1-124-261-00	s	ELECT 10uF 20% 50V
C515	1-126-157-11	s	ELECT 10uF 20% 16V
C517	1-124-261-00	s	ELECT 10uF 20% 50V
C519	1-124-261-00	s	ELECT 10uF 20% 50V
C521	1-126-096-11	s	ELECT 10uF 20% 35V
C522	1-164-489-11	s	CERAMIC, CHIP 0.22uF 10% 16V
C523	1-164-232-11	s	CERAMIC, CHIP 0.01uF 10% 100V
C602	1-126-096-11	s	ELECT 10uF 20% 35V
C603	1-126-096-11	s	ELECT 10uF 20% 35V
C604	1-126-096-11	s	ELECT 10uF 20% 35V
C605	1-126-096-11	s	ELECT 10uF 20% 35V
C702	1-126-923-11	s	ELECT 220uF 20% 10V
C802	1-126-096-11	s	ELECT 10uF 20% 35V
C804	1-124-589-11	s	ELECT 47uF 20% 16V
C805	1-124-589-11	s	ELECT 47uF 20% 16V
C807	1-126-096-11	s	ELECT 10uF 20% 35V
C809	1-124-589-11	s	ELECT 47uF 20% 16V

NOTE: Please see pages 7-10 for the parts that are not listed in the parts list.

(ADA-31 BOARD)

Ref. No. or Q'ty	Part No.	SP	Description
C810	1-124-589-11	s	ELECT 47uF 20% 16V
C930	1-126-096-11	s	ELECT 10uF 20% 35V
C931	1-126-096-11	s	ELECT 10uF 20% 35V
CN1	1-564-005-11	o	CONNECTOR 6P, MALE
CN2	1-506-480-11	s	CONNECTOR 15P, MALE
CN3	1-506-474-11	s	CONNECTOR 9P, MALE
CN4	1-506-469-11	s	CONNECTOR 4P, MALE
CN5	1-564-011-11	o	CONNECTOR 12P, MALE
CP501	1-466-175-11	s	FILTER UNIT, LOW-PASS
D1	8-719-028-74	s	DIODE NSQ03A04
D2	8-719-028-74	s	DIODE NSQ03A04
D3	8-719-028-74	s	DIODE NSQ03A04
D4	8-719-028-74	s	DIODE NSQ03A04
D6	8-719-941-23	s	DIODE DA204U
D7	8-719-941-23	s	DIODE DA204U
D8	8-719-210-33	s	DIODE EC10DS2
D9	8-719-941-23	s	DIODE DA204U
D10	8-719-941-23	s	DIODE DA204U
D11	8-719-941-23	s	DIODE DA204U
D12	8-719-941-23	s	DIODE DA204U
D101	8-719-941-23	s	DIODE DA204U
D102	8-719-941-23	s	DIODE DA204U
D103	8-719-941-23	s	DIODE DA204U
D104	8-719-941-23	s	DIODE DA204U
D105	8-719-941-23	s	DIODE DA204U
D106	8-719-941-23	s	DIODE DA204U
D201	8-719-941-23	s	DIODE DA204U
D202	8-719-941-23	s	DIODE DA204U
D203	8-719-941-23	s	DIODE DA204U
D204	8-719-941-23	s	DIODE DA204U
D206	8-719-941-23	s	DIODE DA204U
D207	8-719-941-23	s	DIODE DA204U
D501	8-719-941-23	s	DIODE DA204U
D502	8-719-941-23	s	DIODE DA204U
D503	8-719-941-23	s	DIODE DA204U
D504	8-719-941-23	s	DIODE DA204U
D801	8-719-210-33	s	DIODE EC10DS2
D901	8-719-210-33	s	DIODE EC10DS2
D902	8-719-210-33	s	DIODE EC10DS2
IC1	8-759-999-09	s	IC CS5326-KP
IC2	8-759-701-84	s	IC NJM7905FA
IC3	8-759-701-75	s	IC NJM7805FA
IC4	8-759-701-59	s	IC NJM78M09FA
IC5	8-759-701-87	s	IC NJM7909FA
IC9	8-759-925-90	s	IC SN74HC74NS
IC10	8-759-925-90	s	IC SN74HC74NS
IC11	8-759-927-46	s	IC SN74HC00NS
IC101	8-759-208-09	s	IC TC4052BFHB
IC102	8-759-745-64	s	IC NJM4560M
IC103	8-759-234-77	s	IC TC4S66F
IC104	8-759-745-64	s	IC NJM4560M
IC105	8-759-745-64	s	IC NJM4560M
IC106	8-759-234-77	s	IC TC4S66F
IC201	8-759-208-09	s	IC TC4052BFHB
IC202	8-759-745-64	s	IC NJM4560M
IC203	8-759-234-77	s	IC TC4S66F
IC204	8-759-745-64	s	IC NJM4560M
IC205	8-759-745-64	s	IC NJM4560M

(ADA-31 BOARD)

Ref. No. or Q'ty	Part No.	SP	Description
IC206	8-759-234-77	s	IC TC4S66F
IC301	8-759-998-22	s	IC PCM56P
IC302	8-759-745-64	s	IC NJM4560M
IC303	8-759-234-77	s	IC TC4S66F
IC401	8-759-998-22	s	IC PCM56P
IC402	8-759-745-64	s	IC NJM4560M
IC403	8-759-234-77	s	IC TC4S66F
IC501	8-759-700-45	s	IC NJM4556M-A
IC502	8-759-745-64	s	IC NJM4560M
IC503	8-759-701-02	s	IC NJM2073M
IC701	8-759-973-71	s	IC TL7705CPS-B
L4	1-410-482-31	s	INDUCTOR 100uH
L5	1-410-482-31	s	INDUCTOR 100uH
L6	1-410-482-31	s	INDUCTOR 100uH
L502	1-410-482-31	s	INDUCTOR 100uH
L503	1-410-482-31	s	INDUCTOR 100uH
L801	1-412-533-21	s	INDUCTOR 47UH
L802	1-412-533-21	s	INDUCTOR 47UH
Q4	8-729-901-05	s	TRANSISTOR DTA124EK
Q501	8-729-901-05	s	TRANSISTOR DTA124EK
Q502	8-729-901-00	s	TRANSISTOR DTC124EK
Q503	8-729-140-98	s	TRANSISTOR 2SD773-3
Q504	8-729-901-05	s	TRANSISTOR DTA124EK
Q505	8-729-901-00	s	TRANSISTOR DTC124EK
Q801	8-729-901-05	s	TRANSISTOR DTA124EK
Q802	8-729-901-00	s	TRANSISTOR DTC124EK
Q803	8-729-901-05	s	TRANSISTOR DTA124EK
Q804	8-729-901-00	s	TRANSISTOR DTC124EK
Q805	8-729-901-00	s	TRANSISTOR DTC124EK
Q806	8-729-901-05	s	TRANSISTOR DTA124EK
Q807	8-729-901-05	s	TRANSISTOR DTA124EK
Q808	8-729-901-00	s	TRANSISTOR DTC124EK
Q809	8-729-140-98	s	TRANSISTOR 2SD773-3
RV101	1-241-631-11	s	RES, ADJ CARBON 22K
RV201	1-241-631-11	s	RES, ADJ CARBON 22K
RV301	1-241-630-11	s	RES, ADJ CARBON 10K
RV401	1-241-630-11	s	RES, ADJ CARBON 10K
RY501	1-515-716-11	s	RELAY
RY502	1-515-716-11	s	RELAY
RY801	1-515-716-11	s	RELAY

CP-233A BOARD (For UC,EK)

Ref. No. or Q'ty	Part No.	SP	Description
1pc	1-650-076-11	o	PRINTED CIRCUIT BOARD, CP-233
C1	1-164-182-11	s	CERAMIC, CHIP 3300pF 10% 100V
C2	1-164-182-11	s	CERAMIC, CHIP 3300pF 10% 100V
C4	1-164-182-11	s	CERAMIC, CHIP 3300pF 10% 100V
C5	1-164-182-11	s	CERAMIC, CHIP 3300pF 10% 100V
CN1	1-564-005-11	o	CONNECTOR 6P, MALE
CN2	1-565-284-11	o	CONNECTOR, XLR 3P, FEMALE
CN3	1-565-284-11	o	CONNECTOR, XLR 3P, FEMALE
CN4	1-565-284-11	o	CONNECTOR, XLR 3P, FEMALE
CN5	1-564-002-11	s	CONNECTOR 3P, MALE
FB1	1-412-694-11	s	INDUCTOR, BEED
FB2	1-412-694-11	s	INDUCTOR, BEED
FB11	1-412-694-11	s	INDUCTOR, BEED
FB12	1-412-694-11	s	INDUCTOR, BEED
FB13	1-412-694-11	s	INDUCTOR, BEED
FB14	1-412-694-11	s	INDUCTOR, BEED
FB15	1-412-694-11	s	INDUCTOR, BEED
FB16	1-412-694-11	s	INDUCTOR, BEED
FB21	1-412-694-11	s	INDUCTOR, BEED
FB22	1-412-694-11	s	INDUCTOR, BEED
FB23	1-412-694-11	s	INDUCTOR, BEED
FB24	1-412-694-11	s	INDUCTOR, BEED
FB25	1-412-694-11	s	INDUCTOR, BEED
FB26	1-412-694-11	s	INDUCTOR, BEED

NOTE: Please see pages 7-10 for the parts that are not listed in the parts list.

CP-233B BOARD (For J)

Ref. No. or Q'ty	Part No.	SP	Description
1pc	1-650-076-11	o	PRINTED CIRCUIT BOARD, CP-233
C1	1-164-182-11	s	CERAMIC, CHIP 3300pF 10% 100V
C2	1-164-182-11	s	CERAMIC, CHIP 3300pF 10% 100V
C4	1-164-182-11	s	CERAMIC, CHIP 3300pF 10% 100V
C5	1-164-182-11	s	CERAMIC, CHIP 3300pF 10% 100V
CN1	1-564-005-11	o	CONNECTOR 6P, MALE
CN2	1-565-283-11	o	CONNECTOR, XLR 3P, MALE
CN3	1-565-283-11	o	CONNECTOR, XLR 3P, MALE
CN4	1-565-284-11	o	CONNECTOR, XLR 3P, FEMALE
CN5	1-564-002-11	s	CONNECTOR 3P, MALE
FB1	1-412-694-11	s	INDUCTOR, BEED
FB2	1-412-694-11	s	INDUCTOR, BEED
FB11	1-412-694-11	s	INDUCTOR, BEED
FB12	1-412-694-11	s	INDUCTOR, BEED
FB13	1-412-694-11	s	INDUCTOR, BEED
FB14	1-412-694-11	s	INDUCTOR, BEED
FB15	1-412-694-11	s	INDUCTOR, BEED
FB16	1-412-694-11	s	INDUCTOR, BEED
FB21	1-412-694-11	s	INDUCTOR, BEED
FB22	1-412-694-11	s	INDUCTOR, BEED
FB23	1-412-694-11	s	INDUCTOR, BEED
FB24	1-412-694-11	s	INDUCTOR, BEED
FB25	1-412-694-11	s	INDUCTOR, BEED
FB26	1-412-694-11	s	INDUCTOR, BEED

CP-234 BOARD

Ref. No. or Q'ty	Part No.	SP	Description
1pc	1-650-077-11	o	PRINTED CIRCUIT BOARD, CP-234
C1	1-164-182-11	s	CERAMIC, CHIP 3300pF 10% 100V
C2	1-164-182-11	s	CERAMIC, CHIP 3300pF 10% 100V
CN1	1-506-469-11	s	CONNECTOR 4P, MALE
FB1	1-412-694-11	s	INDUCTOR, BEED
FB2	1-412-694-11	s	INDUCTOR, BEED
J1	1-562-999-41	s	JACK, PIN 2P

HP-57 BOARD

Ref. No. or Q'ty	Part No.	SP	Description
1pc	1-650-075-11	o	PRINTED CIRCUIT BOARD, HP-57
1pc	3-678-376-01	o	BRACKET,JACK
1pc	7-682-903-01	s	SCREW +PWH 3X5
FB1	1-412-694-11	s	INDUCTOR, BEED
FB2	1-412-694-11	s	INDUCTOR, BEED
FB3	1-412-694-11	s	INDUCTOR, BEED
FB4	1-412-694-11	s	INDUCTOR, BEED
J1	1-569-190-11	s	JACK (LARGE TYPE)
RV1	1-241-331-11	s	RES, VAR CARBON 10K/10K

KY-247 BOARD

Ref. No. or Q'ty	Part No.	SP	Description
1pc	1-650-074-11	o	PRINTED CIRCUIT BOARD, KY-247
1pc	4-928-315-81	s	KEY TOP
S1	1-571-655-21	s	SWITCH, PUSH(WITH LED)

LED-160 BOARD

Ref. No. or Q'ty	Part No.	SP	Description
1pc	1-650-080-11	o	PRINTED CIRCUIT BOARD, LED-160
D1	8-719-041-51	s	LED GL1EG111, YELLOWISH GREEN

REEL FG BOARD

Ref. No. or Q'ty	Part No.	SP	Description
1pc	A-8276-769-A	o	MOUNTED CIRCUIT BOARD, REEL FG
(This assembly includes the following parts.)			
1pc	1-648-983-11	o	PRINTED CIRCUIT BOARD, REEL FG
C1	1-164-505-11	s	CERAMIC 2.2uF 16V

NOTE: Please see pages 7-10 for the parts that are not listed in the parts list.

RF-53 BOARD

Ref. No. or Q'ty	Part No.	SP	Description
C102	1-164-845-11	s	CERAMIC 5PF 5% 16V
C103	1-164-004-11	s	CERAMIC, CHIP 0.1uF 10% 25V
C104	1-164-845-11	s	CERAMIC 5PF 5% 16V
C105	1-164-004-11	s	CERAMIC, CHIP 0.1uF 10% 25V
C107	1-164-874-11	s	CERAMIC 100PF 5% 16V
C108	1-164-874-11	s	CERAMIC 100PF 5% 16V
C111	1-164-004-11	s	CERAMIC, CHIP 0.1uF 10% 25V
C112	1-162-921-11	s	CERAMIC, CHIP 33PF 5% 50V
C113	1-164-004-11	s	CERAMIC, CHIP 0.1uF 10% 25V
C114	1-162-921-11	s	CERAMIC, CHIP 33PF 5% 50V
C115	1-164-004-11	s	CERAMIC, CHIP 0.1uF 10% 25V
C116	1-164-004-11	s	CERAMIC, CHIP 0.1uF 10% 25V
C117	1-164-937-11	s	CERAMIC 0.001uF 10% 16V
C118	1-164-937-11	s	CERAMIC 0.001uF 10% 16V
C119	1-164-874-11	s	CERAMIC 100PF 5% 16V
C120	1-164-874-11	s	CERAMIC 100PF 5% 16V
C121	1-164-004-11	s	CERAMIC, CHIP 0.1uF 10% 25V
C122	1-164-004-11	s	CERAMIC, CHIP 0.1uF 10% 25V
C123	1-164-882-11	s	CERAMIC 220PF 5% 16V
C124	1-164-940-11	s	CERAMIC 0.0033uF 10% 16V
C125	1-164-882-11	s	CERAMIC 220PF 5% 16V
C126	1-164-004-11	s	CERAMIC, CHIP 0.1uF 10% 25V
C128	1-164-937-11	s	CERAMIC 0.001uF 10% 16V
C129	1-164-935-11	s	CERAMIC 470PF 10% 16V
C130	1-164-882-11	s	CERAMIC 220PF 5% 16V
C131	1-164-874-11	s	CERAMIC 100PF 5% 16V
C132	1-164-004-11	s	CERAMIC, CHIP 0.1uF 10% 25V
C134	1-162-968-11	s	CERAMIC, CHIP 0.0047uF 10% 50V
C136	1-164-004-11	s	CERAMIC, CHIP 0.1uF 10% 25V
C137	1-164-882-11	s	CERAMIC 220PF 5% 16V
C138	1-164-882-11	s	CERAMIC 220PF 5% 16V
C139	1-162-964-11	s	CERAMIC, CHIP 0.001uF 10% 50V
C202	1-164-845-11	s	CERAMIC 5PF 5% 16V
C203	1-164-004-11	s	CERAMIC, CHIP 0.1uF 10% 25V
C204	1-164-845-11	s	CERAMIC 5PF 5% 16V
C205	1-164-004-11	s	CERAMIC, CHIP 0.1uF 10% 25V
C207	1-164-874-11	s	CERAMIC 100PF 5% 16V
C208	1-164-874-11	s	CERAMIC 100PF 5% 16V
C211	1-164-004-11	s	CERAMIC, CHIP 0.1uF 10% 25V
C212	1-162-921-11	s	CERAMIC, CHIP 33PF 5% 50V
C213	1-164-004-11	s	CERAMIC, CHIP 0.1uF 10% 25V
C214	1-162-921-11	s	CERAMIC, CHIP 33PF 5% 50V
C215	1-164-004-11	s	CERAMIC, CHIP 0.1uF 10% 25V
C216	1-164-004-11	s	CERAMIC, CHIP 0.1uF 10% 25V
C217	1-164-937-11	s	CERAMIC 0.001uF 10% 16V
C218	1-164-937-11	s	CERAMIC 0.001uF 10% 16V
C219	1-164-874-11	s	CERAMIC 100PF 5% 16V
C220	1-164-874-11	s	CERAMIC 100PF 5% 16V
C221	1-164-004-11	s	CERAMIC, CHIP 0.1uF 10% 25V
C222	1-164-004-11	s	CERAMIC, CHIP 0.1uF 10% 25V
C223	1-164-882-11	s	CERAMIC 220PF 5% 16V
C224	1-164-940-11	s	CERAMIC 0.0033uF 10% 16V
C225	1-164-882-11	s	CERAMIC 220PF 5% 16V
C226	1-164-004-11	s	CERAMIC, CHIP 0.1uF 10% 25V
C228	1-164-937-11	s	CERAMIC 0.001uF 10% 16V
C229	1-164-935-11	s	CERAMIC 470PF 10% 16V
C230	1-164-882-11	s	CERAMIC 220PF 5% 16V
C231	1-164-874-11	s	CERAMIC 100PF 5% 16V
C232	1-164-004-11	s	CERAMIC, CHIP 0.1uF 10% 25V

(RF-53 BOARD)

Ref. No. or Q'ty	Part No.	SP	Description
C234	1-162-968-11	s	CERAMIC, CHIP 0.0047uF 10% 50V
C236	1-164-004-11	s	CERAMIC, CHIP 0.1uF 10% 25V
C237	1-164-882-11	s	CERAMIC 220PF 5% 16V
C238	1-164-882-11	s	CERAMIC 220PF 5% 16V
C239	1-162-964-11	s	CERAMIC, CHIP 0.001uF 10% 50V
C301	1-164-004-11	s	CERAMIC, CHIP 0.1uF 10% 25V
C303	1-164-004-11	s	CERAMIC, CHIP 0.1uF 10% 25V
C304	1-164-004-11	s	CERAMIC, CHIP 0.1uF 10% 25V
C307	1-164-004-11	s	CERAMIC, CHIP 0.1uF 10% 25V
CN1	1-566-531-11	s	CONNECTOR, FPC (ZIF) 15P
CN2	1-565-882-11	o	CONNECTOR, 10P, MALE
CN3	1-566-534-11	s	CONNECTOR, FPC (ZIF) 18P
IC101	8-752-039-01	s	IC CXA1364R
IC201	8-752-039-01	s	IC CXA1364R
IC301	8-759-064-36	s	IC MB88346BPFV
L101	1-410-381-11	s	INDUCTOR CHIP 10UH
L201	1-410-381-11	s	INDUCTOR CHIP 10UH
L301	1-410-381-11	s	INDUCTOR CHIP 10UH
Q101	8-729-102-08	s	TRANSISTOR 2SC2223-T1F14
Q102	8-729-102-08	s	TRANSISTOR 2SC2223-T1F14
Q103	8-729-901-00	s	TRANSISTOR DTC124EK
Q104	8-729-230-49	s	TRANSISTOR 2SC2712-YG
Q105	8-729-230-49	s	TRANSISTOR 2SC2712-YG
Q106	8-729-216-21	s	TRANSISTOR 2SA1162-Y
Q107	8-729-230-49	s	TRANSISTOR 2SC2712-YG
Q108	8-729-216-21	s	TRANSISTOR 2SA1162-Y
Q109	8-729-230-49	s	TRANSISTOR 2SC2712-YG
Q110	8-729-230-49	s	TRANSISTOR 2SC2712-YG
Q201	8-729-102-08	s	TRANSISTOR 2SC2223-T1F14
Q202	8-729-102-08	s	TRANSISTOR 2SC2223-T1F14
Q203	8-729-901-00	s	TRANSISTOR DTC124EK
Q204	8-729-230-49	s	TRANSISTOR 2SC2712-YG
Q205	8-729-230-49	s	TRANSISTOR 2SC2712-YG
Q206	8-729-216-21	s	TRANSISTOR 2SA1162-Y
Q207	8-729-230-49	s	TRANSISTOR 2SC2712-YG
Q208	8-729-216-21	s	TRANSISTOR 2SA1162-Y
Q209	8-729-230-49	s	TRANSISTOR 2SC2712-YG
Q210	8-729-230-49	s	TRANSISTOR 2SC2712-YG
R101	1-216-837-11	s	METAL, CHIP 22K 5% 1/16W
R102	1-216-797-11	s	METAL, CHIP 10 5% 1/16W
R103	1-216-797-11	s	METAL, CHIP 10 5% 1/16W
R104	1-216-837-11	s	METAL, CHIP 22K 5% 1/16W
R105	1-216-833-11	s	METAL, CHIP 10K 5% 1/16W
R106	1-216-812-11	s	METAL, CHIP 180 5% 1/16W
R107	1-216-812-11	s	METAL, CHIP 180 5% 1/16W
R108	1-216-833-11	s	METAL, CHIP 10K 5% 1/16W
R109	1-216-834-11	s	METAL, CHIP 12K 5% 1/16W
R110	1-218-973-11	s	METAL 27K 5% 1/16W
R111	1-218-967-11	s	METAL 15K 5% 1/16W
R112	1-218-967-11	s	METAL 15K 5% 1/16W
R113	1-218-990-11	s	METAL 0 5% 1/16W
R114	1-218-973-11	s	METAL 47K 5% 1/16W
R115	1-218-990-11	s	METAL 0 5% 1/16W
R116	1-218-967-11	s	METAL 15K 5% 1/16W
R117	1-218-967-11	s	METAL 15K 5% 1/16W
R118	1-218-952-11	s	METAL 820 5% 1/16W
R119	1-218-961-11	s	METAL 4.7K 5% 1/16W
R120	1-220-184-81	s	METAL 1.3K 5% 16W

NOTE: Please see pages 7-10 for the parts that are not listed in the parts list.

(RF-53 BOARD)

Ref. No. or Q'ty	Part No.	SP	Description
R121	1-218-961-11	s	METAL 4.7K 5% 1/16W
R122	1-218-968-11	s	METAL 18K 5% 1/16W
R123	1-218-968-11	s	METAL 18K 5% 1/16W
R124	1-220-193-81	s	METAL 7.5K 5% 16W
R125	1-220-193-81	s	METAL 7.5K 5% 16W
R126	1-218-968-11	s	METAL 18K 5% 1/16W
R127	1-220-193-81	s	METAL 7.5K 5% 16W
R128	1-216-835-11	s	METAL, CHIP 15K 5% 1/16W
R129	1-216-833-11	s	METAL, CHIP 10K 5% 1/16W
R130	1-216-809-11	s	METAL, CHIP 100 5% 1/16W
R131	1-216-821-11	s	METAL, CHIP 1K 5% 1/16W
R132	1-216-821-11	s	METAL, CHIP 1K 5% 1/16W
R133	1-216-830-11	s	METAL, CHIP 5.6K 5% 1/16W
R134	1-216-830-11	s	METAL, CHIP 5.6K 5% 1/16W
R135	1-216-791-11	s	METAL, CHIP 3.3 5% 1/16W
R136	1-216-791-11	s	METAL, CHIP 3.3 5% 1/16W
R137	1-216-827-11	s	METAL, CHIP 3.3K 5% 1/16W
R138	1-216-827-11	s	METAL, CHIP 3.3K 5% 1/16W
R139	1-216-827-11	s	METAL, CHIP 3.3K 5% 1/16W
R140	1-216-821-11	s	METAL, CHIP 1K 5% 1/16W
R201	1-216-837-11	s	METAL, CHIP 22K 5% 1/16W
R202	1-216-797-11	s	METAL, CHIP 10 5% 1/16W
R203	1-216-797-11	s	METAL, CHIP 10 5% 1/16W
R204	1-216-837-11	s	METAL, CHIP 22K 5% 1/16W
R205	1-216-833-11	s	METAL, CHIP 10K 5% 1/16W
R206	1-216-812-11	s	METAL, CHIP 180 5% 1/16W
R207	1-216-812-11	s	METAL, CHIP 180 5% 1/16W
R208	1-216-833-11	s	METAL, CHIP 10K 5% 1/16W
R209	1-216-834-11	s	METAL, CHIP 12K 5% 1/16W
R210	1-218-973-11	s	METAL 47K 5% 1/16W
R211	1-218-967-11	s	METAL 15K 5% 1/16W
R212	1-218-967-11	s	METAL 15K 5% 1/16W
R213	1-218-990-11	s	METAL 0 5% 1/16W
R214	1-218-973-11	s	METAL 47K 5% 1/16W
R215	1-218-990-11	s	METAL 0 5% 1/16W
R216	1-218-967-11	s	METAL 15K 5% 1/16W
R217	1-218-967-11	s	METAL 15K 5% 1/16W
R218	1-218-952-11	s	METAL 820 5% 1/16W
R219	1-218-961-11	s	METAL 4.7K 5% 1/16W
R220	1-220-184-81	s	METAL 1.3K 5% 16W
R221	1-218-961-11	s	METAL 4.7K 5% 1/16W
R222	1-218-968-11	s	METAL 18K 5% 1/16W
R223	1-218-968-11	s	METAL 18K 5% 1/16W
R224	1-220-193-81	s	METAL 7.5K 5% 16W
R225	1-220-193-81	s	METAL 7.5K 5% 16W
R226	1-218-968-11	s	METAL 18K 5% 1/16W
R227	1-220-193-81	s	METAL 7.5K 5% 16W
R228	1-216-835-11	s	METAL, CHIP 15K 5% 1/16W
R229	1-216-833-11	s	METAL, CHIP 10K 5% 1/16W
R230	1-216-809-11	s	METAL, CHIP 100 5% 1/16W
R231	1-216-821-11	s	METAL, CHIP 1K 5% 1/16W
R232	1-216-821-11	s	METAL, CHIP 1K 5% 1/16W
R233	1-216-830-11	s	METAL, CHIP 5.6K 5% 1/16W
R234	1-216-830-11	s	METAL, CHIP 5.6K 5% 1/16W
R235	1-216-791-11	s	METAL, CHIP 3.3 5% 1/16W
R236	1-216-791-11	s	METAL, CHIP 3.3 5% 1/16W
R237	1-216-827-11	s	METAL, CHIP 3.3K 5% 1/16W
R238	1-216-827-11	s	METAL, CHIP 3.3K 5% 1/16W
R239	1-216-827-11	s	METAL, CHIP 3.3K 5% 1/16W

NOTE: Please see pages 7-10 for the parts that are not listed in the parts list.

(RF-53 BOARD)

Ref. No. or Q'ty	Part No.	SP	Description
R240	1-216-821-11	s	METAL, CHIP 1K 5% 1/16W
R301	1-216-841-11	s	METAL, CHIP 47K 5% 1/16W
R302	1-216-841-11	s	METAL, CHIP 47K 5% 1/16W
R303	1-216-841-11	s	METAL, CHIP 47K 5% 1/16W

SSP-8 BOARD

Ref. No. or Q'ty	Part No.	SP	Description
1pc	A-8275-316-A	o	MOUNTED CIRCUIT BOARD, SSP-8
(This assembly includes the following parts.)			
1pc	1-563-180-11	o	HOUSING, 6P
3pcs	4-924-029-11	s	WASHER
BT101	1-528-229-11	o	BATTERY, LITHIUM CR-2450
BZ101	1-529-025-00	s	BUZZER
C102	1-136-165-00	s	FILM 0.1uF 5% 50V
C104	1-126-157-11	s	ELECT 10uF 20% 16V
C113	1-128-057-11	s	ELECT 330uF 20% 6.3V
C118	1-125-447-11	s	DOUBLE LAYERS 1FARAD 5.5V
C119	1-125-447-11	s	DOUBLE LAYERS 1FARAD 5.5V
C136	1-126-160-11	s	ELECT 1uF 20% 50V
C137	1-126-160-11	s	ELECT 1uF 20% 50V
C139	1-126-160-11	s	ELECT 1uF 20% 50V
C140	1-126-160-11	s	ELECT 1uF 20% 50V
C156	1-126-157-11	s	ELECT 10uF 20% 16V
C162	1-128-057-11	s	ELECT 330uF 20% 6.3V
C164	1-126-940-11	s	ELECT 330uF 20% 16V
C175	1-164-081-11	s	CERAMIC 470pF 10% 50V
C176	1-164-081-11	s	CERAMIC 470pF 10% 50V
C177	1-164-081-11	s	CERAMIC 470pF 10% 50V
C178	1-164-081-11	s	CERAMIC 470pF 10% 50V
C179	1-164-081-11	s	CERAMIC 470pF 10% 50V
C180	1-164-081-11	s	CERAMIC 470pF 10% 50V
C181	1-164-081-11	s	CERAMIC 470pF 10% 50V
C182	1-164-081-11	s	CERAMIC 470pF 10% 50V
C183	1-164-081-11	s	CERAMIC 470pF 10% 50V
C184	1-164-081-11	s	CERAMIC 470pF 10% 50V
C185	1-164-081-11	s	CERAMIC 470pF 10% 50V
C305	1-128-057-11	s	ELECT 330uF 20% 6.3V
C323	1-128-057-11	s	ELECT 330uF 20% 6.3V
C505	1-128-057-11	s	ELECT 330uF 20% 6.3V
C526	1-128-057-11	s	ELECT 330uF 20% 6.3V
C701	1-126-160-11	s	ELECT 1uF 20% 50V
C702	1-128-057-11	s	ELECT 330uF 20% 6.3V
C703	1-126-940-11	s	ELECT 330uF 20% 16V
C704	1-126-940-11	s	ELECT 330uF 20% 16V
C705	1-128-057-11	s	ELECT 330uF 20% 6.3V
C706	1-126-157-11	s	ELECT 10uF 20% 16V
C707	1-126-160-11	s	ELECT 1uF 20% 50V
C708	1-136-169-00	s	MYLAR 0.22uF 5% 50V
C709	1-136-169-00	s	MYLAR 0.22uF 5% 50V
C713	1-136-177-00	s	FILM 1uF 5% 50V
C714	1-126-157-11	s	ELECT 10uF 20% 16V
C715	1-164-346-11	s	CERAMIC 1uF 16V
C721	1-128-057-11	s	ELECT 330uF 20% 6.3V
C724	1-128-057-11	s	ELECT 330uF 20% 6.3V
C728	1-128-057-11	s	ELECT 330uF 20% 6.3V
C733	1-128-057-11	s	ELECT 330uF 20% 6.3V
C736	1-128-057-11	s	ELECT 330uF 20% 6.3V
C738	1-128-057-11	s	ELECT 330uF 20% 6.3V
C742	1-128-057-11	s	ELECT 330uF 20% 6.3V
C746	1-128-057-11	s	ELECT 330uF 20% 6.3V
C751	1-128-057-11	s	ELECT 330uF 20% 6.3V
C765	1-164-096-11	s	CERAMIC 0.01uF 50V
C766	1-128-057-11	s	ELECT 330uF 20% 6.3V

NOTE: Please see pages 7-10 for the parts that are not listed in the parts list.

(SSP-8 BOARD)

Ref. No. or Q'ty	Part No.	SP	Description
C767	1-162-806-11	s	CERAMIC 0.1uF 10% 50V
C768	1-162-806-11	s	CERAMIC 0.1uF 10% 50V
C769	1-162-806-11	s	CERAMIC 0.1uF 10% 50V
C770	1-162-806-11	s	CERAMIC 0.1uF 10% 50V
C902	1-128-057-11	s	ELECT 330uF 20% 6.3V
C904	1-128-057-11	s	ELECT 330uF 20% 6.3V
C908	1-128-057-11	s	ELECT 330uF 20% 6.3V
C910	1-128-057-11	s	ELECT 330uF 20% 6.3V
C912	1-128-057-11	s	ELECT 330uF 20% 6.3V
C914	1-128-057-11	s	ELECT 330uF 20% 6.3V
C916	1-128-057-11	s	ELECT 330uF 20% 6.3V
C918	1-128-057-11	s	ELECT 330uF 20% 6.3V
C922	1-128-057-11	s	ELECT 330uF 20% 6.3V
C924	1-128-057-11	s	ELECT 330uF 20% 6.3V
C926	1-128-057-11	s	ELECT 330uF 20% 6.3V
C928	1-128-057-11	s	ELECT 330uF 20% 6.3V
CN102	1-506-472-11	s	CONNECTOR 7P, MALE
CN103	1-506-683-11	s	CONNECTOR, PS 16P, MALE
CN104	1-564-001-11	o	CONNECTOR 2P, MALE
CN302	1-506-480-11	s	CONNECTOR 15P, MALE
CN701	1-508-797-00	o	PIN, CONNECTOR 4P
CN702	1-508-797-00	o	PIN, CONNECTOR 4P
CN703	1-508-797-00	o	PIN, CONNECTOR 4P
CN706	1-506-468-11	s	CONNECTOR 3P, MALE
CN709	1-506-474-11	s	CONNECTOR 9P, MALE
CN712	1-506-480-11	s	CONNECTOR 15P, MALE
CNI103	1-540-080-11	s	SOCKET, IC (IC113) 68P
CNI112	1-251-103-11	o	SOCKET, IC 40P¥
CNI301	1-540-080-11	s	SOCKET, IC (IC113) 68P
CNI307	1-251-103-11	o	SOCKET, IC 40P¥
CNI501	1-540-080-11	s	SOCKET, IC (IC113) 68P
CNI509	1-251-103-11	o	SOCKET, IC 40P¥
CP101	1-577-171-11	s	CRYSTAL 16.00MHz
CP102	1-415-502-11	s	DELAY LINE 100nS
CP701	1-760-149-21	s	CRYSTAL 49.1520MHz¥
CP702	1-760-148-21	s	CRYSTAL 37.6320MHz¥
D101	8-719-028-74	s	DIODE NSQ03A04
D102	8-719-028-74	s	DIODE NSQ03A04
D103	8-719-028-74	s	DIODE NSQ03A04
D104	8-719-028-74	s	DIODE NSQ03A04
D105	8-719-028-74	s	DIODE NSQ03A04
D106	8-719-989-22	s	LED CL-150R-CD, RED
D107	8-719-989-22	s	LED CL-150R-CD, RED
D108	8-719-987-41	s	LED CL-150Y-CD, AMBER
D109	8-719-987-43	s	LED CL-150PG-CD, GRN
D701	8-719-911-19	s	DIODE 1SS119
D702	8-719-911-19	s	DIODE 1SS119
D703	8-719-911-19	s	DIODE 1SS119
D704	8-719-911-19	s	DIODE 1SS119
D705	8-719-911-19	s	DIODE 1SS119
D706	8-719-911-19	s	DIODE 1SS119
FB701	1-412-694-11	s	INDUCTOR BEED
IC101	8-759-925-74	s	IC TC74HC04NS
IC102	8-759-973-71	s	IC TL7705CPS-B
IC103	8-759-151-34	s	IC UPD70216L-10
IC104	8-759-170-54	s	IC CXD8830Q
IC105	8-759-929-77	s	IC SN74LS03NS

(SSP-8 BOARD)

Ref. No. or Q'ty	Part No.	SP	Description
IC106	8-752-338-23	s	IC CXK581100TM-10LL
IC107	8-752-338-23	s	IC CXK581100TM-10LL
IC108	8-759-171-48	s	IC CXD8326Q
IC109	8-759-927-46	s	IC SN74HC00NS
IC110	8-759-973-43	s	IC MB8421-90LPFQ
IC111	8-759-510-88	s	IC MB8431-90LPFQ
IC114	8-759-926-06	s	IC SN74HC126NS
IC115	8-759-174-34	s	IC ST93CS56M1013TR
IC116	8-759-164-72	s	IC UPD71101GD-10-5BB
IC117	8-759-922-44	s	IC MSM5832RS
IC118	8-759-925-76	s	IC SN74HC08NS
IC119	8-759-925-90	s	IC SN74HC74NS
IC120	8-759-925-80	s	IC SN74HC14NS
IC121	8-759-166-98	s	IC LT1134CS-E1
IC122	8-759-926-82	s	IC SN74HC574ANS
IC123	8-759-926-82	s	IC SN74HC574ANS
IC124	8-759-925-85	s	IC SN74HC32NS
IC125	8-759-171-49	s	IC UPD72020GC-8-3B6
IC126	8-759-939-28	s	IC CXD1102Q
IC127	8-752-337-91	s	IC CXK58257ATM-70LL
IC128	8-752-337-91	s	IC CXK58257ATM-70LL
IC129	8-759-251-49	o	IC PALCE16V8Q-25JC-VIF
IC131	8-759-149-10	s	IC UPD4702G
IC132	8-759-948-58	s	IC 74F244SJ
IC133	8-759-500-05	s	IC MSM6338MS-K
IC134	8-759-926-77	s	IC SN74HC541NS
IC135	8-759-149-10	s	IC UPD4702G
IC136	8-759-149-10	s	IC UPD4702G
IC301	8-759-151-34	s	IC UPD70216L-10
IC302	8-759-170-54	s	IC CXD8830Q
IC303	8-759-926-12	s	IC SN74HC139NS
IC304	8-759-925-74	s	IC TC74HC04NS
IC305	8-752-337-91	s	IC CXK58257ATM-70LL
IC306	8-752-337-91	s	IC CXK58257ATM-70LL
IC308	8-759-925-72	s	IC SN74HC02NS
IC309	8-759-926-06	s	IC SN74HC126NS
IC310	8-759-149-09	s	IC UPD71059GB-10-3B4
IC311	8-759-149-07	s	IC UPD71054GB-10-3B4
IC312	8-759-925-85	s	IC SN74HC32NS
IC313	8-759-154-60	s	IC UPD71055GB-10-3B4
IC314	8-759-926-82	s	IC SN74HC574ANS
IC316	8-759-051-53	s	IC TD62381F
IC317	8-759-170-56	s	IC CXD8828Q
IC318	8-759-926-52	s	IC SN74HC257NS
IC319	8-759-925-90	s	IC SN74HC74NS
IC501	8-759-151-34	s	IC UPD70216L-10
IC502	8-759-170-54	s	IC CXD8830Q
IC503	8-759-925-82	s	IC SN74HC21NS
IC504	8-759-925-74	s	IC TC74HC04NS
IC505	8-759-973-43	s	IC MB8421-90LPFQ
IC506	8-759-510-88	s	IC MB8431-90LPFQ
IC507	8-752-337-91	s	IC CXK58257ATM-70LL
IC508	8-752-337-91	s	IC CXK58257ATM-70LL
IC510	8-759-925-72	s	IC SN74HC02NS
IC511	8-759-926-06	s	IC SN74HC126NS
IC512	8-759-149-09	s	IC UPD71059GB-10-3B4
IC513	8-759-925-85	s	IC SN74HC32NS
IC514	8-759-149-07	s	IC UPD71054GB-10-3B4
IC515	8-759-926-82	s	IC SN74HC574ANS

(SSP-8 BOARD)

Ref. No. or Q'ty	Part No.	SP	Description
IC517	8-759-170-56	s	IC CXD8828Q
IC701	8-759-708-05	s	IC NJM78L05A
IC702	8-752-306-51	s	IC CX23065A
IC703	8-759-923-65	s	IC AM26LS31CNS
IC704	8-759-923-64	s	IC AM26LS32ACNS
IC705	8-759-925-74	s	IC TC74HC04NS
IC706	8-759-931-43	s	IC SN74LS624NS
IC707	8-752-337-91	s	IC CXK58257ATM-70LL
IC708	8-752-352-24	s	IC CXD2605R
IC709	8-759-243-19	s	IC TC7SU04F
IC710	8-759-926-77	s	IC SN74HC541NS
IC711	8-752-337-91	s	IC CXK58257ATM-70LL
IC712	8-752-352-24	s	IC CXD2605R
IC713	8-759-243-19	s	IC TC7SU04F
IC714	8-752-337-91	s	IC CXK58257ATM-70LL
IC715	8-752-352-24	s	IC CXD2605R
IC716	8-759-243-19	s	IC TC7SU04F
IC717	8-759-925-76	s	IC SN74HC08NS
IC718	8-759-925-74	s	IC TC74HC04NS
IC719	8-759-170-55	s	IC CXD8829Q
IC720	8-759-925-90	s	IC SN74HC74NS
IC721	8-759-925-90	s	IC SN74HC74NS
IC722	8-759-925-90	s	IC SN74HC74NS
IC723	8-759-926-24	s	IC SN74HC164NS
IC724	8-759-926-24	s	IC SN74HC164NS
IC725	8-759-926-24	s	IC SN74HC164NS
IC726	8-759-926-24	s	IC SN74HC164NS
IC727	8-759-926-24	s	IC SN74HC164NS
IC728	8-759-926-26	s	IC SN74HC166NS
IC729	8-759-926-26	s	IC SN74HC166NS
IC730	8-759-926-26	s	IC SN74HC166NS
IC731	8-759-926-26	s	IC SN74HC166NS
IC732	8-759-038-46	s	IC TC7S00F-TE85L
IC733	8-759-038-46	s	IC TC7S00F-TE85L
IC734	8-759-038-46	s	IC TC7S00F-TE85L
IC901	8-759-254-77	s	IC CXD8864Q
IC902	8-759-043:71	s	IC TMS44400-80SD
IC903	8-759-043-71	s	IC TMS44400-80SD
IC904	8-759-043-71	s	IC TMS44400-80SD
IC905	8-759-043-71	s	IC TMS44400-80SD
IC906	8-759-254-77	s	IC CXD8864Q
IC907	8-759-043-71	s	IC TMS44400-80SD
IC908	8-759-043-71	s	IC TMS44400-80SD
IC909	8-759-043-71	s	IC TMS44400-80SD
IC910	8-759-043-71	s	IC TMS44400-80SD
IC911	8-752-343-18	s	IC CXD2704Q
IC912	8-752-343-18	s	IC CXD2704Q
IC913	8-752-343-18	s	IC CXD2704Q
L701	1-410-482-31	s	INDUCTOR 100uH
L702	1-410-482-31	s	INDUCTOR 100uH
L703	1-410-482-31	s	INDUCTOR 100uH
L704	1-410-482-31	s	INDUCTOR 100uH
L705	1-412-533-21	s	INDUCTOR 47uF
ND301	8-719-951-37	s	LED LA-301VB, RED
ND501	8-719-951-37	s	LED LA-301VB, RED
S102	1-692-535-11	s	SWITCH, DIP 8-CKT
T701	1-437-194-21	s	TRANSFORMER, PULSE

NOTE: Please see pages 7-10 for the parts that are not listed in the parts list.

(SSP-8 BOARD)

Ref. No. or Q'ty	Part No.	SP	Description
X101	1-567-862-11	s	CRYSTAL, 4.9152MHZ
X102	1-577-110-11	s	CRYSTAL 20MHz
X103	1-567-098-00	s	CRYSTAL 32.76800MHz
X301	1-577-110-11	s	CRYSTAL 20MHz
X501	1-577-110-11	s	CRYSTAL 20MHz
X701	1-567-815-11	s	CRYSTAL 22.5792MHz¥

SV-147 BOARD

Ref. No. or Q'ty	Part No.	SP	Description
1pc	A-8310-133-A	o	MOUNTED CIRCUIT BOARD, SV-147
(This assembly includes the following parts.)			
4pcs	3-374-740-01	s	BRACKET, LED
C1	1-164-489-11	s	CERAMIC, CHIP 0.22uF 10% 16V
C5	1-162-969-11	s	CERAMIC, CHIP 0.0068uF 10% 25V
C7	1-162-970-11	s	CERAMIC, CHIP 0.01uF 10% 25V
C8	1-164-227-11	s	CERAMIC, CHIP 0.022uF 10% 25V
C9	1-162-970-11	s	CERAMIC, CHIP 0.01uF 10% 25V
C10	1-162-965-11	s	CERAMIC, CHIP 0.0015uF 10% 50V
C11	1-164-156-11	s	CERAMIC, CHIP 0.1uF 25V
C13	1-164-156-11	s	CERAMIC, CHIP 0.1uF 25V
C14	1-164-156-11	s	CERAMIC, CHIP 0.1uF 25V
C15	1-164-156-11	s	CERAMIC, CHIP 0.1uF 25V
C20	1-164-156-11	s	CERAMIC, CHIP 0.1uF 25V
C21	1-164-156-11	s	CERAMIC, CHIP 0.1uF 25V
C22	1-162-965-11	s	CERAMIC, CHIP 0.0015uF 10% 50V
C23	1-162-965-11	s	CERAMIC, CHIP 0.0015uF 10% 50V
C24	1-164-227-11	s	CERAMIC, CHIP 0.022uF 10% 25V
C25	1-164-227-11	s	CERAMIC, CHIP 0.022uF 10% 25V
C26	1-164-156-11	s	CERAMIC, CHIP 0.1uF 25V
C27	1-162-970-11	s	CERAMIC, CHIP 0.01uF 10% 25V
C28	1-164-156-11	s	CERAMIC, CHIP 0.1uF 25V
C29	1-162-970-11	s	CERAMIC, CHIP 0.01uF 10% 25V
C30	1-162-916-11	s	CERAMIC, CHIP 12PF 5% 50V
C31	1-162-916-11	s	CERAMIC, CHIP 12PF 5% 50V
C32	1-162-970-11	s	CERAMIC, CHIP 0.01uF 10% 25V
C33	1-162-964-11	s	CERAMIC, CHIP 0.001uF 10% 50V
C34	1-162-966-11	s	CERAMIC, CHIP 0.0022uF 10% 50V
C35	1-164-227-11	s	CERAMIC, CHIP 0.022uF 10% 25V
C36	1-164-156-11	s	CERAMIC, CHIP 0.1uF 25V
C38	1-164-156-11	s	CERAMIC, CHIP 0.1uF 25V
C39	1-164-156-11	s	CERAMIC, CHIP 0.1uF 25V
C40	1-128-397-21	s	ELECT 100uF 20% 16V
C41	1-164-156-11	s	CERAMIC, CHIP 0.1uF 25V
C42	1-164-156-11	s	CERAMIC, CHIP 0.1uF 25V
C43	1-128-397-21	s	ELECT 100uF 20% 16V
C44	1-164-156-11	s	CERAMIC, CHIP 0.1uF 25V
C45	1-164-156-11	s	CERAMIC, CHIP 0.1uF 25V
C47	1-164-156-11	s	CERAMIC, CHIP 0.1uF 25V
C48	1-164-156-11	s	CERAMIC, CHIP 0.1uF 25V
C49	1-164-156-11	s	CERAMIC, CHIP 0.1uF 25V
C52	1-164-156-11	s	CERAMIC, CHIP 0.1uF 25V
C53	1-164-156-11	s	CERAMIC, CHIP 0.1uF 25V
C54	1-128-397-21	s	ELECT 100uF 20% 16V
C55	1-128-397-21	s	ELECT 100uF 20% 16V
C56	1-164-156-11	s	CERAMIC, CHIP 0.1uF 25V
C57	1-164-156-11	s	CERAMIC, CHIP 0.1uF 25V
C58	1-164-156-11	s	CERAMIC, CHIP 0.1uF 25V
C59	1-164-156-11	s	CERAMIC, CHIP 0.1uF 25V
C60	1-164-156-11	s	CERAMIC, CHIP 0.1uF 25V
C61	1-164-156-11	s	CERAMIC, CHIP 0.1uF 25V
C62	1-164-156-11	s	CERAMIC, CHIP 0.1uF 25V
C63	1-164-156-11	s	CERAMIC, CHIP 0.1uF 25V
C64	1-162-968-11	s	CERAMIC, CHIP 0.0047uF 10% 50V
CN1	1-691-419-11	o	HOUSING, 8P
CN2	1-566-532-11	s	CONNECTOR, FPC 16P
CN3	1-566-195-11	o	CONNECTOR, PIN 2P, MALE

NOTE: Please see pages 7-10 for the parts that are not listed in the parts list.

(SV-147 BOARD)

Ref. No. or Q'ty	Part No.	SP	Description
CN4	1-566-526-11	s	CONNECTOR, 10P
CN5	1-566-524-11	s	CONNECTOR, FPC (ZIF) 8P
CN6	1-569-529-11	o	HOUSING, 14P
CN7	1-506-479-11	s	CONNECTOR 14P, MALE
CN8	1-566-534-11	s	CONNECTOR, FPC (ZIF) 18P
CN10	1-566-526-11	s	CONNECTOR, 10P
CN11	1-506-485-11	s	CONNECTOR 6P, MALE
D1	8-719-016-38	s	LED LN1351C6, GRN
D2	8-719-016-38	s	LED LN1351C6, GRN
D3	8-719-016-38	s	LED LN1351C6, GRN
D4	8-719-980-38	s	DIODE SB07-03C
D5	8-719-980-38	s	DIODE SB07-03C
D6	8-719-037-59	s	LED LN210RP, RED
D7	8-719-037-60	s	LED LN410YP, YEL
D8	8-719-018-39	s	LED LN310GP, GRN
D9	8-719-037-60	s	LED LN410YP, YEL
D10	8-719-400-18	s	DIODE MA152WK
D11	8-719-400-18	s	DIODE MA152WK
D12	8-719-400-18	s	DIODE MA152WK
D13	8-719-400-18	s	DIODE MA152WK
D14	8-719-980-38	s	DIODE SB07-03C
D15	8-719-980-38	s	DIODE SB07-03C
D16	8-719-400-18	s	DIODE MA152WK
IC1	8-759-929-26	s	IC TL431CPS
IC2	8-752-039-31	s	IC CXA1418N
IC3	8-752-038-71	s	IC CXA1127AM
IC4	8-759-100-94	s	IC UPC358G2
IC5	8-759-925-90	s	IC SN74HC74NS
IC6	8-759-925-90	s	IC SN74HC74NS
IC7	8-759-927-29	s	IC SN74HCU04NS
IC8	8-759-926-77	s	IC SN74HC541NS
IC9	8-752-851-04	s	IC CXP875P40Q-PCME77
IC10	8-759-998-49	s	IC MB3771PF
IC11	8-759-245-52	s	IC TA7291F
IC12	8-759-551-68	s	IC M6M80021FP
IC13	8-759-300-71	s	IC HD14053BFP
IC14	8-759-926-06	s	IC SN74HC126NS
IC15	8-759-823-87	s	IC LB1638M
IC16	8-759-100-94	s	IC UPC358G2
IC17	8-759-150-61	s	IC UPC78L05T
IC18	8-759-150-61	s	IC UPC78L05T
L1	1-410-381-11	s	INDUCTOR CHIP 10UH
L2	1-410-381-11	s	INDUCTOR CHIP 10UH
Q1	8-729-230-49	s	TRANSISTOR 2SC2712-YG
Q2	8-729-140-75	s	TRANSISTOR 2SD999
Q3	8-729-901-00	s	TRANSISTOR DTC124EK
Q4	8-729-901-00	s	TRANSISTOR DTC124EK
Q5	8-729-140-75	s	TRANSISTOR 2SD999
Q6	8-729-140-75	s	TRANSISTOR 2SD999
Q7	8-729-901-00	s	TRANSISTOR DTC124EK
Q8	8-729-901-00	s	TRANSISTOR DTC124EK
Q9	8-729-901-00	s	TRANSISTOR DTC124EK
Q10	8-729-901-00	s	TRANSISTOR DTC124EK
Q11	8-729-901-00	s	TRANSISTOR DTC124EK
Q12	8-729-901-00	s	TRANSISTOR DTC124EK
Q13	8-729-230-49	s	TRANSISTOR 2SC2712-YG
Q14	8-729-017-58	s	TRANSISTOR 2SB1323

NOTE: Please see pages 7-10 for the parts that are not listed in the parts list.

(SV-147 BOARD)

Ref. No. or Q'ty	Part No.	SP	Description
Q15	8-729-140-75	s	TRANSISTOR 2SD999
Q16	8-729-901-00	s	TRANSISTOR DTC124EK
Q17	8-729-901-00	s	TRANSISTOR DTC124EK
Q18	8-729-901-00	s	TRANSISTOR DTC124EK
R1	1-216-841-11	s	METAL, CHIP 47K 5% 1/16W
R2	1-218-736-11	s	METAL 68K 0.50% 1/16W
R3	1-218-736-11	s	METAL 68K 0.50% 1/16W
R4	1-216-635-11	s	METAL, CHIP 220 0.5% 1/10W
R5	1-216-635-11	s	METAL, CHIP 220 0.5% 1/10W
R6	1-216-853-11	s	METAL, CHIP 470K 5% 1/16W
R7	1-216-841-11	s	METAL, CHIP 47K 5% 1/16W
R8	1-218-716-11	s	METAL 10K 0.50% 1/16W
R9	1-218-700-11	s	METAL 2.2K 0.50% 1/16W
R10	1-216-651-11	s	METAL, CHIP 1K 0.5% 1/10W
R11	1-218-698-11	s	METAL, CHIP 1.8K 0.50% 1/16W
R12	1-218-845-11	s	METAL 820 0.50% 1/16W
R13	1-216-841-11	s	METAL, CHIP 47K 5% 1/16W
R14	1-216-651-11	s	METAL, CHIP 1K 0.5% 1/10W
R15	1-216-841-11	s	METAL, CHIP 47K 5% 1/16W
R16	1-218-716-11	s	METAL 10K 0.50% 1/16W
R17	1-216-793-11	s	METAL, CHIP 4.7 5% 1/16W
R18	1-216-793-11	s	METAL, CHIP 4.7 5% 1/16W
R19	1-216-793-11	s	METAL, CHIP 4.7 5% 1/16W
R20	1-216-651-11	s	METAL, CHIP 1K 0.5% 1/10W
R21	1-216-635-11	s	METAL, CHIP 220 0.5% 1/10W
R22	1-216-635-11	s	METAL, CHIP 220 0.5% 1/10W
R23	1-216-651-11	s	METAL, CHIP 1K 0.5% 1/10W
R24	1-216-651-11	s	METAL, CHIP 1K 0.5% 1/10W
R25	1-218-716-11	s	METAL 10K 0.50% 1/16W
R26	1-218-716-11	s	METAL 10K 0.50% 1/16W
R27	1-218-716-11	s	METAL 10K 0.50% 1/16W
R28	1-218-716-11	s	METAL 10K 0.50% 1/16W
R29	1-216-635-11	s	METAL, CHIP 220 0.5% 1/10W
R30	1-218-716-11	s	METAL 10K 0.50% 1/16W
R31	1-218-716-11	s	METAL 10K 0.50% 1/16W
R32	1-216-635-11	s	METAL, CHIP 220 0.5% 1/10W
R33	1-216-635-11	s	METAL, CHIP 220 0.5% 1/10W
R34	1-216-635-11	s	METAL, CHIP 220 0.5% 1/10W
R35	1-216-857-11	s	METAL, CHIP 1M 5% 1/16W
R36	1-218-313-11	s	METAL, CHIP 560 1% 1/16W
R37	1-216-809-11	s	METAL, CHIP 100 5% 1/16W
R38	1-216-841-11	s	METAL, CHIP 47K 5% 1/16W
R39	1-216-841-11	s	METAL, CHIP 47K 5% 1/16W
R40	1-216-841-11	s	METAL, CHIP 47K 5% 1/16W
R41	1-216-841-11	s	METAL, CHIP 47K 5% 1/16W
R42	1-216-841-11	s	METAL, CHIP 47K 5% 1/16W
R43	1-216-841-11	s	METAL, CHIP 47K 5% 1/16W
R44	1-216-841-11	s	METAL, CHIP 47K 5% 1/16W
R45	1-216-841-11	s	METAL, CHIP 47K 5% 1/16W
R46	1-216-841-11	s	METAL, CHIP 47K 5% 1/16W
R47	1-216-841-11	s	METAL, CHIP 47K 5% 1/16W
R48	1-216-841-11	s	METAL, CHIP 47K 5% 1/16W
R49	1-216-809-11	s	METAL, CHIP 100 5% 1/16W
R50	1-216-841-11	s	METAL, CHIP 47K 5% 1/16W
R51	1-218-736-11	s	METAL 68K 0.50% 1/16W
R52	1-218-716-11	s	METAL 10K 0.50% 1/16W
R53	1-216-841-11	s	METAL, CHIP 47K 5% 1/16W
R54	1-216-829-11	s	METAL, CHIP 4.7K 5% 1/16W
R55	1-218-716-11	s	METAL 10K 0.50% 1/16W

(SV-147 BOARD)

Ref. No. or Q'ty	Part No.	SP	Description
R56	1-218-706-11	s	METAL, CHIP 3.9K 0.50% 1/16W
R57	1-218-716-11	s	METAL 10K 0.50% 1/16W
R58	1-216-829-11	s	METAL, CHIP 4.7K 5% 1/16W
R59	1-216-841-11	s	METAL, CHIP 47K 5% 1/16W
R60	1-218-700-11	s	METAL 2.2K 0.50% 1/16W
R61	1-218-736-11	s	METAL 68K 0.50% 1/16W
R62	1-218-700-11	s	METAL 2.2K 0.50% 1/16W
R63	1-218-700-11	s	METAL 2.2K 0.50% 1/16W
R64	1-218-716-11	s	METAL 10K 0.50% 1/16W
R65	1-218-716-11	s	METAL 10K 0.50% 1/16W
R66	1-216-841-11	s	METAL, CHIP 47K 5% 1/16W
R67	1-216-841-11	s	METAL, CHIP 47K 5% 1/16W
R68	1-218-698-11	s	METAL, CHIP 1.8K 0.50% 1/16W
R69	1-216-841-11	s	METAL, CHIP 47K 5% 1/16W
R70	1-216-841-11	s	METAL, CHIP 47K 5% 1/16W
R71	1-218-716-11	s	METAL 10K 0.50% 1/16W
R72	1-216-809-11	s	METAL, CHIP 100 5% 1/16W
R73	1-218-744-11	s	METAL 150K 0.50% 1/16W
R74	1-216-809-11	s	METAL, CHIP 100 5% 1/16W
R75	1-218-867-11	s	METAL 6.8K 0.50% 1/16W
R76	1-218-867-11	s	METAL 6.8K 0.50% 1/16W
R77	1-218-724-11	s	METAL 22K 0.50% 1/16W
R78	1-218-724-11	s	METAL 22K 0.50% 1/16W
R79	1-216-635-11	s	METAL, CHIP 220 0.5% 1/10W
R80	1-216-809-11	s	METAL, CHIP 100 5% 1/16W
R81	1-216-841-11	s	METAL, CHIP 47K 5% 1/16W
R82	1-216-841-11	s	METAL, CHIP 47K 5% 1/16W
R83	1-216-841-11	s	METAL, CHIP 47K 5% 1/16W
R84	1-216-841-11	s	METAL, CHIP 47K 5% 1/16W
R85	1-216-841-11	s	METAL, CHIP 47K 5% 1/16W
R86	1-216-841-11	s	METAL, CHIP 47K 5% 1/16W
R87	1-216-841-11	s	METAL, CHIP 47K 5% 1/16W
R88	1-215-907-11	s	METAL 22 5% 3W
R89	1-216-841-11	s	METAL, CHIP 47K 5% 1/16W
R90	1-216-837-11	s	METAL, CHIP 22K 5% 1/16W
S1	1-570-598-11	s	SWITCH, DIP 4-CKT
X1	1-579-962-21	s	CRYSTAL 22.5792MHz

TENREGI BOARD

Ref. No. or Q'ty	Part No.	SP	Description
1pc	1-648-982-11	o	PRINTED CIRCUIT BOARD, TENREGI
D1	8-719-821-03	s	ELEMENT, HALL THS117

VR-154 BOARD

Ref. No. or Q'ty	Part No.	SP	Description
1pc	1-650-078-11	o	PRINTED CIRCUIT BOARD, VR-154
S1	1-467-523-11	s	ENCODER, ROTARY

VR-181 BOARD

Ref. No. or Q'ty	Part No.	SP	Description
1pc	1-650-079-11	o	PRINTED CIRCUIT BOARD, VR-181
S1	1-467-523-11	s	ENCODER, ROTARY

NOTE: Please see pages 7-10 for the parts that are not listed in the parts list.

FRAME

Ref. No. or Q'ty	Part No.	SP	Description
1pc	⚠1-251-148-11	s	INLET, AC (3P)
1pc	⚠1-413-647-11	s	SWITCHING REGULATOR
1pc	1-466-954-11	s	DISPLAY UNIT, EL
1pc	1-466-955-11	s	ENCODER, ROTARY
1pc	1-467-524-11	o	KEY BOARD UNIT
4pcs	1-500-082-11	s	FILTER, CLAMP (FERRITE CORE)
1pc	1-532-827-11	s	FUSE (MT4-3A-N1)
1pc	1-543-793-11	s	FILTER, CLAMP (FERRITE CORE)
1pc	1-544-578-11	s	SPEAKER
2pcs	⚠1-560-764-21	o	CONTACT, FEMALE AWG18-24
1pc	⚠1-562-817-11	o	HOUSING, CONNECTOR 2P
2pcs	⚠1-565-787-21	o	CONTACT, RECEPTACLE 1P
1pc	1-570-028-11	s	SWITCH, MICRO
1pc	⚠1-570-455-11	s	SWITCH, AC POWER SEESAW
1pc	1-698-239-11	s	MOTOR, DC FAN
1pc	1-952-582-11	o	HARNESS, SUB (EL)

7-4. ACCESSORIES SUPPLIED

Ref. No. or Q'ty	Part No.	SP	Description
1pc	⚠1-534-754-00	s	CORD, POWER (For J)
1pc	⚠1-551-812-11	s	CORD, POWER (For UC)
1pc	⚠1-590-910-11	s	CORD, SET POWER (For EK)

NOTE: Please see pages 7-10 for the parts that are not listed in the parts list.

SONY

DAT DUAL DECK EDITOR

PCM-E7700

SUPPLEMENT-1

対象マニュアル:
APPLICABLE MANUAL:
PCM-E7700 (J)(UC)(EK) OPERATION AND MAINTENANCE MANUAL
1st Edition (9-976-774-01)

対象シリアルナンバー:
APPLICABLE Serial No.:
PCM-E7700 (J) : 10001 以降
PCM-E7700 (UC): 20001 以降
PCM-E7700 (EK): 50001 以降

内容:
SUBJECT:

目次: 差し替え
TABLE OF CONTENTS: Replacement

第1章 サービスインフォメーション
1-5ページ～1-12ページ 追加
SECTION 1 SERVICE OVERVIEW
Page. 1-5 to page. 1-13 addition

SECTION 4 BOARD LAYOUTS
4-1ページ～4-8ページ 差し替え
Page. 4-1 to page. 4-8 replacement

SECTION 5 SCHEMATIC DIAGRAMS
5-1ページ～5-14ページ 差し替え
Page. 5-1 to page. 5-14 replacement

SECTION 7 SPARE PARTS
7-1ページ～7-21ページ 差し替え
Page. 7-1 to page. 7-21 replacement

SECTION 8 CHANGED PARTS
8-1ページ～8-3ページ追加
Page. 8-1 to page. 8-3 addition

この追加版-1を、お持ちのOPERATION AND MAINTENANCE MANUALに追加および差し替えて御使用ください。
Please replace and add this SUPPLEMENT-1 manual to your own OPERATION AND MAINTENANCE MANUAL.

OPERATION AND MAINTENANCE MANUAL Part 2

PCM-E7700 (J)
PCM-E7700 (UC)
PCM-E7700 (EK, 和, 英)
9-976-774-81

Sony Corporation
Broadcast Products Company

Printed in Japan
1994. 11 08
© 1994
Published by Broadcast Products Company

目次
TABLE OF CONTENTS

1. サービスインフォメーション

1-1. DCファンモータの交換 ..... 1-1(J)
1-2. SSP-8基板に関するサービス情報 ..... 1-2(J)
1-2-1. SSP-8基板上の動作確認用LEDについて ..... 1-2(J)
1-2-2. リチウム電池(CR-2450)の交換 ..... 1-2(J)
1-3. SV-147基板上のスイッチ設定／LEDの機能 ... 1-3(J)
1-4. 補修用部品注意事項 ..... 1-4(J)
1-4-1. 補修用部品注意事項 ..... 1-4(J)
1-4-2. チップ部品の交換方法 ..... 1-4(J)
1-4-3. PLCC ICの取外し方法 ..... 1-5(J)
1-5. サービスメニュー ..... 1-6(J)
1-5-1. "1. PLAYER MECHANICAL DECK ADJUSTMENT"メニュー ..... 1-7(J)
1-5-2. "2. RECORDER MECHANICAL DECK ADJUSTMENT"メニュー ..... 1-7(J)
1-5-3. "3. TEST"メニュー ..... 1-7(J)
1-5-4. "4. INFORMATION"メニュー ..... 1-10(J)

2. メカデッキの交換及び調整

2-1. メカデッキASSY及びメカデッキ部品(定期交換部品)の交換 ..... 2-1(J)
2-2. 調整及び確認 ..... 2-3(J)
2-2-1. 準備 ..... 2-5(J)
2-2-2. サービスメニューでの調整及び確認 ..... 2-7(J)
2-2-3. SV-147基板交換時の確認 ..... 2-28(J)

3. 電気調整

3-1. A/D, D/A系調整(ADA-31基板) ..... 3-1(J)
3-1-1. A/D変換レベル調整 ..... 3-2(J)
3-1-2. D/A変換レベル調整 ..... 3-3(J)

1. SERVICE OVERVIEW

1-1. REPLACEMENT OF DC FAN MOTOR ..... 1-1(E)
1-2. SERVICE INFORMATION ON SSP-8 BOARD ..... 1-2(E)
1-2-1. LEDs for Checking Operations on SSP-8 Board ..... 1-2(E)
1-2-2. Replacement of Lithium Battery (CR-2450) ..... 1-2(E)
1-3. SWITCH SETTING/LED FUNCTION ON SV-147 BOARD ..... 1-3(E)
1-4. NOTES ON REPAIR PARTS ..... 1-4(E)
1-4-1. Notes on Repair Parts ..... 1-4(E)
1-4-2. Replacement Procedure for Chip Parts ..... 1-4(E)
1-4-3. Removal of PLCC IC ..... 1-5(E)
1-5. SERVICE MENU ..... 1-6(E)
1-5-1. "1. PLAYER MECHANICAL DECK ADJUSTMENT" menu ..... 1-7(E)
1-5-2. "2. RECORDER MECHANICAL DECK ADJUSTMENT" menu ..... 1-7(E)
1-5-3. "3. TEST" menu ..... 1-7(E)
1-5-4. "4. INFORMATION" menu ..... 1-10(E)

2. REPLACEMENT AND ALIGNMENT MECHA DECK

2-1. REPLACEMENT OF MECHANICAL DECK ASSY AND PERIODIC REPLACEMENT PARTS ..... 2-1(E)
2-2. ALIGNMENT AND CHECK ..... 2-3(E)
2-2-1. Preparation ..... 2-5(E)
2-2-2. Alignment and Check on Service Menu ..... 2-7(E)
2-2-3. Check of SV-147 Board Replacement ... 2-28(E)

3. ELECTRICAL ALIGNMENT

3-1. A/D, D/A Adjustments (ADA-31 Board) ..... 3-1(E)
3-1-1. A/D Conversion Level Adjustment ..... 3-2(E)
3-1-2. D/A Conversion Level Adjustment ..... 3-3(E)

4. BOARD LAYOUTS

ADA-31 BOARD 4-3
SSP-8 BOARD 4-4
SV-147 BOARD 4-6
RF-53 BOARD 4-7
CP-233A/233B BOARD 4-7
CP-234 BOARD 4-7
HP-57 BOARD 4-8
KY-247 BOARD 4-8
LED-160 BOARD 4-8
VR-154 BOARD 4-8
VR-181 BOARD 4-8

5. SCHEMATIC DIAGRAMS

ADA-31 BOARD 5-2
SSP-8 BOARD 5-4
RF-53 BOARD 5-12
SV-147 BOARD 5-13
FRAME WIRING 5-14

6. SEMICONDUCTOR PIN ASSIGNMENTS

7. SPARE PARTS

7-1. NOTES ON SPARE PARTS 7-1
7-2. EXPLODED VIEWS AND PARTS 7-2
7-3. ELECTRICAL PARTS LIST 7-10
7-4. ACCESSORIES SUPPLIED 7-21

1-4-3. PLCC ICの取り外し方法

ICソケットに差し込まれたPLCCタイプのICを取り外す場合は、下記の工具を使用することを推奨します。20～124ピンまでのピン数のICに利用できます。

PLCCソケット用引き抜き工具
　ソニー部品番号J-6035-070-A

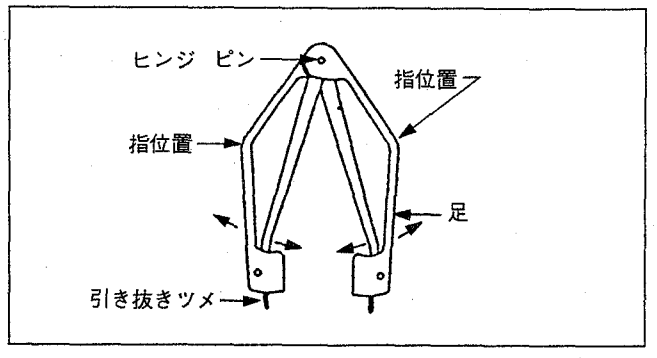

注意：・引き抜き工具でICチップを上方に引っ張らないこと。
　　・必要以上の力で工具をはさみ込まないこと。

1. 工具の足をソケットのスロットの長さに合わせます。

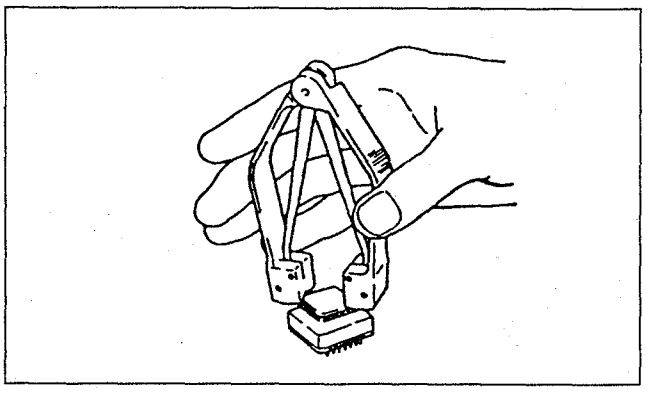

2. 工具の先端の引き抜きツメをICソケットのスロットに差し込み、引き抜き工具の図に示すAの部分がソケットにあたるまで押し込みます。

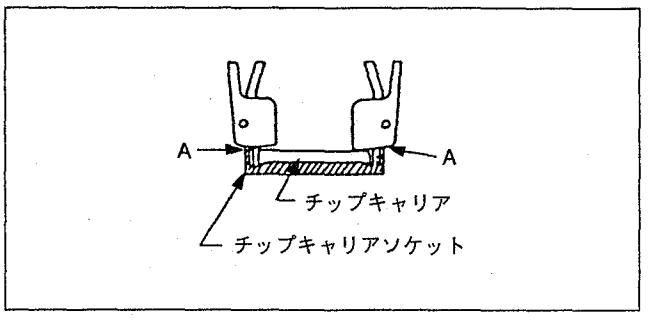

3. 図のように引き抜き工具のリブの部分を持ちます。ソケットには下方向に小さな力がかかります。

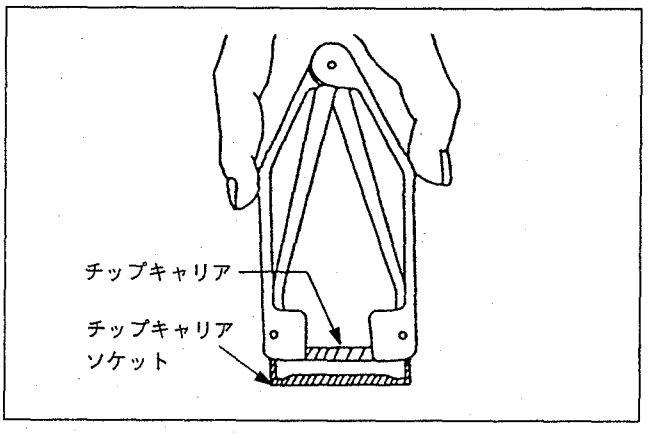

4. 引き抜き工具をはさみ込みます。これにより、工具の足が伸びると同時に、工具の先端のツメがICチップをつかみ、上方向に引き抜きます。
5. 引き抜いた後、力をゆるめ、ICチップを引き抜き工具から外します。

1-5. サービスメニュー

サービスメニュー項目一覧

サービスメニュー

- 1. PLAYER MECHANICAL DECK ADJUSTMENT
  1. SERVO DATA PRESET(サーボデータプリセット)
  2. PLUNGER CHECK(プランジャーテスト)
  3. MECHANICAL DEVICE TEST(デバイステスト)
  4. RECOGNITION SWITCH CHECK(カセットホールスイッチテスト)
  5. END SENSOR LEVEL CHECK(HIGH)(エンドセンサーレベル確認-1)
  6. END SENSOR LEVEL CHECK(LOW)(エンドセンサーレベル確認-2)
  7. DEW SENSOR CHECK(結露センサーレベル確認)
  8. REEL TORQUE CHECK(リールトルク確認)
  9. FWD/RVS TORQUE ADJUSTMENT(FWD/REVトルク調整)
  10. DRUM/CAPSTAN SPEED & WOW CHECK (キャプスタンスピード、ワウフラッター確認)
  11. TAPE PATH ADJUSTMENT(テープパス調整)
  12. SWP POSITION ADJUSTMENT(SWP位置調整)
  13. PATH & FF/REW TIME CHECK(テープパス、FF/REW時間確認)
  14. PB ERROR RATE CHECK(再生エラーレート確認)
  15. ----------
  16. ----------
  17. ----------
  18. SERVO DATA SAVE(サーボデータ保存)
  19. SERVO DATA DISPLAY(サーボデータ表示)
- 2. RECORDER MECHANICAL DECK ADJUSTMENT
  1. SERVO DATA PRESET(サーボデータプリセット)
  2. PLUNGER CHECK(プランジャーテスト)
  3. MECHANICAL DEVICE TEST(デバイステスト)
  4. RECOGNITION SWITCH CHECK(カセットホールスイッチテスト)
  5. END SENSOR LEVEL CHECK(HIGH)(エンドセンサーレベル確認-1)
  6. END SENSOR LEVEL CHECK(LOW)(エンドセンサーレベル確認-2)
  7. DEW SENSOR CHECK(結露センサーレベル確認)
  8. REEL TORQUE CHECK(リールトルク確認)
  9. FWD/RVS TORQUE ADJUSTMENT(FWD/REVトルク調整)
  10. DRUM/CAPSTAN SPEED & WOW CHECK (キャプスタンスピード、ワウフラッター確認)
  11. TAPE PATH ADJUSTMENT(テープパス調整)
  12. SWP POSITION ADJUSTMENT(SWP位置調整)
  13. PATH & FF/REW TIME CHECK(テープパス、FF/REW時間確認)
  14. PB ERROR RATE CHECK(再生エラーレート確認)
  15. REC CURRENT ADJUSTMENT(LEADING)(先行ヘッド記録電流調整)
  16. REC CURRENT ADJUSTMENT(TRAILING)(後行ヘッド記録電流調整)
  17. REC/PB ERROR RATE CHECK(自己録再エラーレート確認)
  18. SERVO DATA SAVE(サーボデータ保存)
  19. SERVO DATA DISPLAY(サーボデータ表示)
- 3. TEST
  1. KEY/DIAL(キー/ダイヤル)
  2. EL/LED(ELディスプレイ/LED)
  3. RS-232C
  4. SSP-8 SIGNAL PATH(SSP-8基板オーディオ信号経路)
- 4. INFORMATION
  1. HOUR METER(アワーメーター)
  2. TAPE(テープ再生データ)
  3. DIGITAL AUDIO INPUT(デジタルオーディオ入力信号)
  4. KEY/WARNING LOG(キー/ワーニング履歴)
  5. VERSION(バージョン)（V2.00～）

サービスメニューは、下記のメニューで構成されている。

- "1. PLAYER MECHANICAL DECK ADJUSTMENT"メニュー
  : プレーヤーメカデッキの調整、テストを行う。
- "2. RECORDER MECHANICAL DEC ADJUSTMENT" メニュー
  : レコーダーメカデッキの調整、テストを行う。
- "3. TEST" メニュー
  :自己診断を行う。
- "4. INFORMATION" メニュー
  :アワーメーターやテープ情報などの各種情報を表示する。

サービスメニューへの入り方

(1) 電源をONし、SHIFTキーを押しながらMODE キーを押す。サービスメニュー初期画面になる。

(2) 各メニューに対応するファンクションキー(F1 : [P-MD], F2: [R-MD],F3: [TEST],F4: [INFORM])を押す。

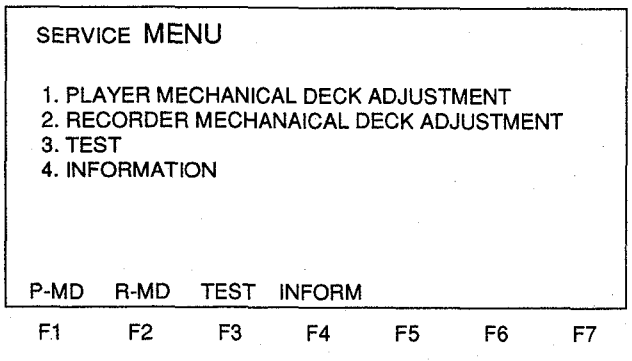

サービスメニュー初期画面

サービスメニューの抜け方

(1) 調整/テスト/インフォメーションメニューから初期画面にもどるには、F2[EXIT]キーを押す。

(2) 通常モードに復帰するには、電源をOFFし再びONにする。オーディオエディットモードになる。

1-5-1. "1.PLAYER MECHANICAL DECK ADJUSTMENT" メニュー

内容、調整方法等詳細は"第2章メカデッキの交換および調整"参照。

1-5-2. "2.RECORDER MECHANICAL DECK ADJUSTMENT" メニュー

内容、調整方法等詳細は"第2章メカデッキの交換および調整"参照。

1-5-3. "3. TEST"メニュー

テストメニューの項目

1 KEY/DIAL :キー/ダイヤル(サーチダイヤル、レベル/バランスつまみ)テスト
2 EL/DISPLAY :ELディスプレイ/LEDテスト
3 RS-232C : RS-232Cループバックテスト
4 SSP-8 SIGNAL PATH :SSP-8基板のオーディオ信号経路テスト

各テストメニューへの入り方

↑、↓キーで項目(テストメニュー)を選択し、F1[TEST ON]キーを押す。

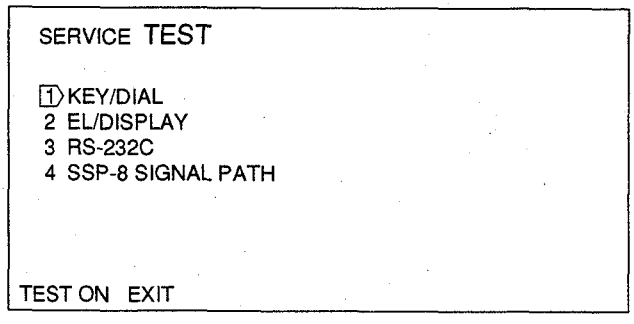

テストメニュー初期画面

メニュー項目	説　明
1 KEY/DIAL (キー/ダイヤルテスト)	• キーテスト(41箇)　:キーを押している間、ELディスプレイのキー表示(押したキー)が点灯し、離すと網掛け表示となる。 • ダイヤルテスト　:JOGダイヤル、LEVEL/BALANCEつまみを回すと、回す方向により数値が＋(増加)/－(減少)する。 メニューの抜け方 SHIFTキーを押しながら、F1 [TEST OFF]キーを押す。
2 EL/DISPLAY (ELディスプレイ/LEDテスト)	• ELディスプレイ　:ディスプレイ表示が全点灯→模様→全消灯を繰り返す。 • LED (21箇)　:すべて点灯する。 メニューの抜け方 F1 [TEST OFF]キーを押す。
3 RS-232C (RS-232Cループバックテスト)	RS-232Cのデータ送受信、コントロール信号の入・出力をチェックする。 テスト方法 (1) D-sub, 25ピン(オス)コネクターの 2ピン(TXD) ——— 3ピン(RXD) 4ピン(RTS) ——— 5ピン(CTS) 6ピン(DSR) ——— 20ピン(DTR) 間をそれぞれ接続したコネクターを用意し、 PCM-E7700のRS-232C コネクタ(リアパネル)に差し込む。 (2) F3 [START]キーを押す。 テストが開始され、結果がディスプレイに表示される。 エラー(FAULT表示)の場合： SSP-8基板の下記箇所のいずれかが不良と想定される。 • IC116(UPD71101) :SCU(Serial Control Unit) • IC121(LT1134)　:RS-232C Driver/Receiver • CN102または、ハーネスの断線 メニューの抜け方 F1 [TEST OFF]キーを押す。 -WIRING SIDE- 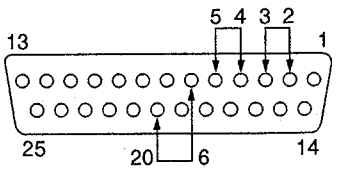 D-sub(25ピン、オス)
4 SSP-8 SIGNAL PATH (SSP-8基板オーディオ信号経路ﾃｽﾄ)	アナログ/デジタル入力端子に異なるオーディオ信号を入力し、SSP-8基板のオーディオ信号経路を切り換えたときに、信号(音)が出力されるかどうかにより、信号経路のICをチェックする。 テスト方法 (1) アナログ/デジタル入力端子に異なるオーディオ信号を入力する。 (2) ↓、↑ キーで信号経路(PATH1～PATH12)を切り換えて、ディスプレイに表示されているアナログまたはデジタル入力信号(音)が出力されることを確認する。信号(音)が出力しない時は、ブロック図および表(1-9ページ)を使用して、不良ICを特定する。 **注意** 1. PATH-10とPATH-11は工場出荷時の検査用のため信号(音)は出力されない。 2. PATH-12ではアナログ/デジタル入力信号(音)にかかわらず内部DSPから1 kHzの信号が出力される。 メニューの抜け方 F1 [TEST OFF]キーを押す。

オーディオ信号経路　ブロック図(SSP-8基板)

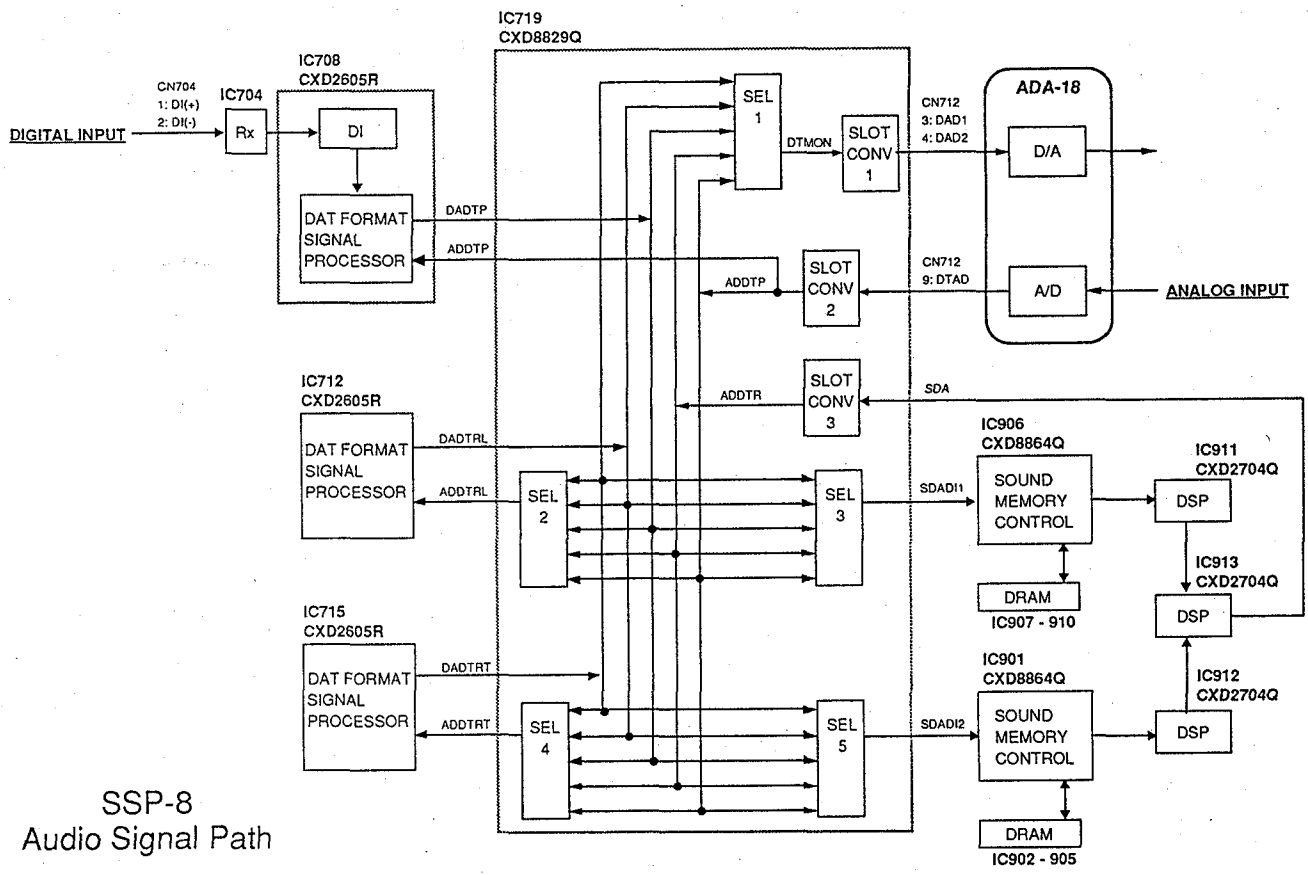

オーディオ信号経路番号と経路IC (SSP-8基板)

PATH NO.	A/D ANALOG	IC704 AM26LS32 DIGITAL	IC708 CXD2605	IC712 CXD2605	IC715 CXD2605	IC719 CXD8829 SEL 1	SEL 2	SEL 3	SEL 4	SEL 5	CONV 1	CONV 2	CONV 3	IC906 CXD8864	IC907-910 DRAM	IC911 CXD2704	IC901 CXD8864	IC902-905 DRAM	IC912 CXD2704	IC913 CXD2704	D/A
PATH-1	○					○					○	○									○
PATH-2		○	○			○					○										○
PATH-3		○	○			○		○			○		○	○		○				○	○
PATH-4		○	○			○		○			○		○	○	○	○				○	○
PATH-5	○		○			○					○	○									○
PATH-6	○		○			○				○	○	○	○				○		○	○	○
PATH-7	○		○			○				○	○	○	○				○	○	○	○	○
PATH-8	○			○		○	○				○	○									○
PATH-9	○				○	○			○		○	○									○
PATH-10	○			○	○	○	○				○	○									○
PATH-11	○		○	○		○	○				○	○									○
PATH-12						○					○		○							○	○

1-5-4. "4. INFORMATION" メニュー

インフォメーションメニューは、下記の項目(メニュー)で構成されている。

1 HOUR METER: アワーメーター(積算時間計)
2 TAPE: テープ再生データ
3 DIGITAL AUDIO INPUT: デジタルオーディオ入力信号
4 KEY/WARNING LOG: キー/ワーニング履歴
5 VERSION: バージョン (V2.00～)

各インフォメーションメニューへの入り方
[↓], [↑]で項目を選択し、[F1] [EXIT]キーを押す。

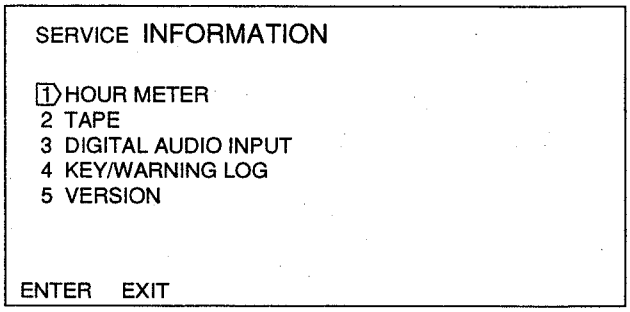

インフォメーションメニュー初期画面

メニュー項目	説　明
1 HOUR METER (アワーメーター)	以下の積算時間または回数を表示する。 OPERATION METER　：電源通電時間 DRUM RUNNING METER　：プレーヤ/レコーダー各デッキのドラム回転時間 TAPE RUNNING METER　：プレーヤ/レコーダー各デッキの走行時間 THREADING/UNTHREDING COUNTER　：プレーヤ/レコーダー各デッキのスレッド/アンスレッド回数 メニューの抜け方 [F2] [EXIT]キーを押す。
2 TAPE (テープ再生データ)	再生エラーレートおよび再生テープ情報を表示する。 再生テープ情報はグループ1, 2, 3に分かれており、[↑]、[↓]キーで選択する。 選択されていないグループの表示データは更新されない。 • テープ走行モード • A-ch, B-chの平均エラーレート グループ1 • メインID ADRS　:フレームアドレス F-ID　:フォーマットID ID1　:エンファシス ID2　:サンプリング周波数 ID3　:チャンネル数 ID4　:量子化 ID5　:トラックピッチ ID6　:デジタルコピー ID7　:パック • サブID DATA ID　:データID TOC　:コントロールID内のTOC ID SKIP　:コントロールID内のショートニングID START　:コントロールID内のスタートID PRIORITY　:コントロールID内のプライオリティID PGM No.　:プログラム番号 PACK ID　:パックID • タイムコード PRO R-TIME　:プロRタイム(H:M:S:F) A-TIME　:アブソリュートタイム(H:M:S:F) TC MARKER　:プロRタイム内のタイムコードマーカー(10進数) TC FORMAT　:プロRタイム内のタイムコードプラグ UBIT　:プロバイナリー(ユーザービット)

メニュー項目	説　明
	グループ2 • サブコード内パックIDとその記録位置: サブコードエリアに記録されているパックIDと記録位置を表示する。 DATフレーム(30msec)は2トラック(A-ch/B-ch)で構成され、各トラックにはSUB1とSUB2の2つのサブコードエリアがある。各エリアには28箇のパック(A-TIMEやPRO R-TIMEなど)を記録することができ、合計では28×2×2=112箇になる。 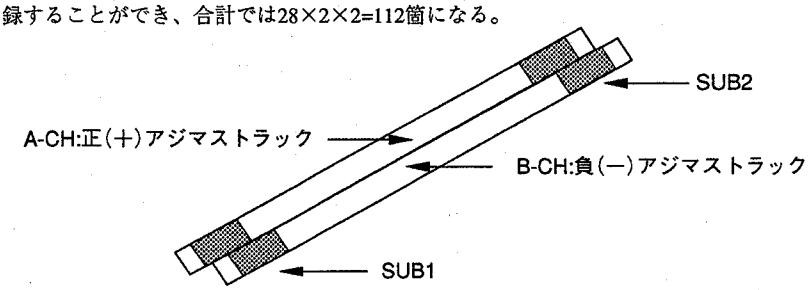 グループ3 • 絶対値変換した16bit再生オーディオ信号のビットマップメーター*)。 左端がビット0で、右端がオーバーを示す。(0000H〜7FFFH, 80000H: OVER) 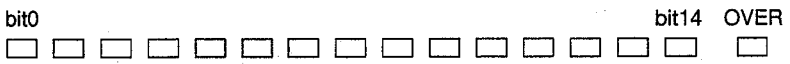 *):ビットマップメーター 16ビットオーディオデータの各ビットを1つのメーターセグメントに対応させ、ビットが1のときに点灯させる表示方式。 各操作キー • テープ走行キー　:[EJECT],[STOP],[PLAY],[FF],[REW],[SHUTTLE] • グループ切り換え:[↑]、[↓]キー • デッキ切り換え　:[F3][DECK]キー メニューの抜け方 [F2][EXIT]キーを押す。
3 DIGITAL AUDIO INPUT (ﾃﾞｼﾞﾀﾙｵｰﾃﾞｨｵ入力信号)	受信状態とチャンネルステータス情報を表示する。 • PLL　:PLL回路のLOCK/UNLOCK • FREQUENCY　:入力信号周波数の偏差 LOCK　:約±1000ppm内 UNLOCK:範囲外 • チャンネルステータス (1) PRO/CONがプロのとき DATA　:オーディオ/ノンオーディオ CHANNEL　:チャンネルモード Fs ID　:サンプリング周波数ID EMPHASIS ID　:エンファシスID (2) PRO/CONがコンスーマのとき CATEGORY　:カテゴリーコード Fs ID　:サンプリング周波数ID EMPHASIS ID　:エンファシスID COPY ID　:コピーID • 絶対値変換した16bit再生オーディオ信号のビットマップメーター。 左端がビット0で、右端がオーバーを示す。(0000H〜7FFFH, 80000H: OVER) 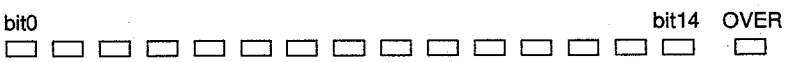 メニューの抜け方 [F2][EXIT]キーを押す。

メニュー項目	説　明
4 KEY/WARNING LOG (キー/ワーニング履歴)	押したキーと発生したワーニングエラーの履歴を表示する。ただし、このモードでのキー操作はメモリーしない。 メモリー数は、240ポイント(1～15ページ) • NO. :通し番号 • MODE :動作モード • SUB MODE :サブモード • KEY/WARNING :キー名称、またはワーニング番号 • DATE, TIME :月/日、時/分/秒 SHIFTキーとの二重押しの場合、キー名称の脇にⓈが表示される。 各操作キー • ページ切り換え :F6[↑],F7[↓]キー • メモリーの消去 :F4[CLEAR]キー **メニューの抜け方** F2[EXIT]キーを押す。
5 VERSION (バージョン)	次のプレーヤー、レコーダー、インターフェイスROMの情報を表示する。 • バージョン履歴 • バージョン • チェックサム(8ビットタイプと16ビットタイプ) **メニューの抜け方** F2[EXIT]キーを押す。

1-4-3. Removal of PLCC IC

The Extraction Tool is useful for removing the IC (PLCC type) inserted into an IC socket. This is useful for all sizes of ICs 20 pins through 124 pins.

Extraction Tool (for PLCC socket)
Sony Part No. J-6035-070-A

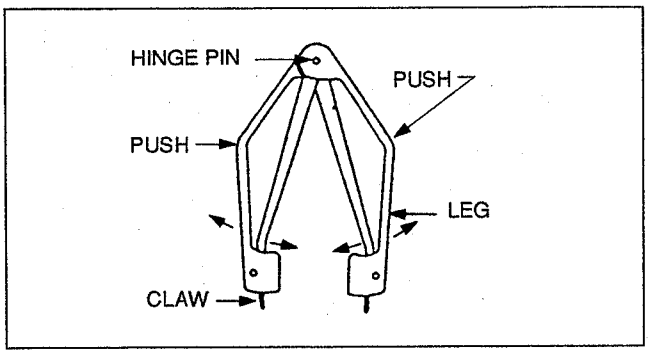

Note: • Never pull chips of IC upward with the Extraction Tool.
• Never hold the Extraction Tool on a strong force.

(1) Adjust which so that claws of the tool are matched to the socket of an IC.

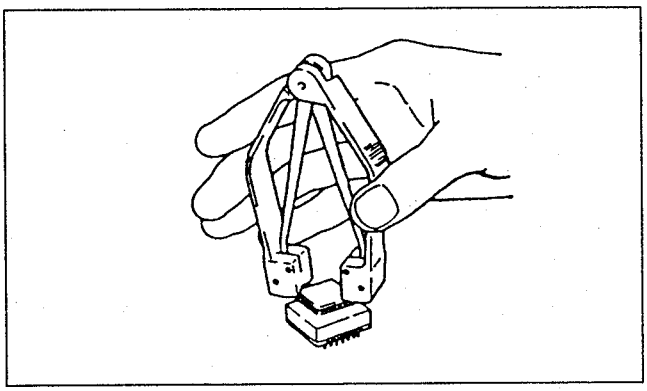

(2) Insert the claws of the tool into the slots of the socket, and then press the tool against the socket so that the A portion shown in the figure contact to the socket.

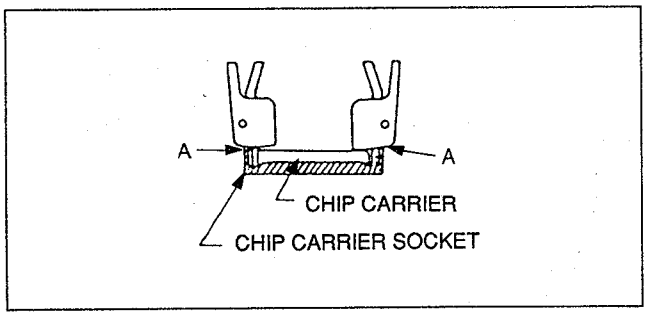

(3) Hold the tool as shown in the figure. The socket is pressed on a little force to downward.

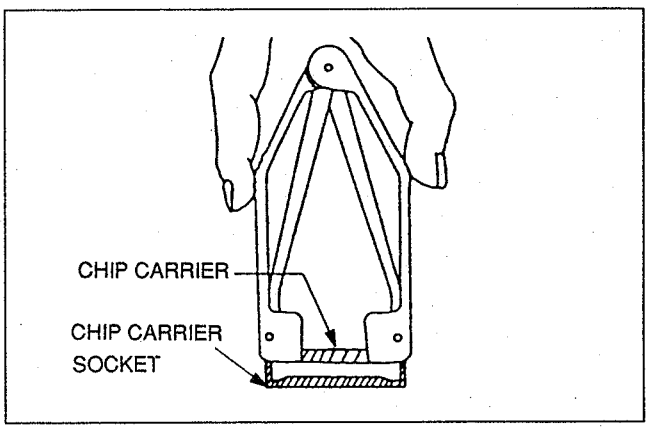

(4) Pinch the tool, so the legs of the tool are straightened. At that time, the claws pinch the chips of the IC and pull the IC upward.
(5) After pulling the IC, loosen the force of the fingers, and take off the chip.

1-5. SERVICE MENU

Service Menu Item List

Service Menu

- 1. PLAYER MECHANICAL DECK ADJUSTMENT
  1. SERVO DATA PRESET
  2. PLUNGER CHECK
  3. MECHANICAL DEVICE TEST
  4. RECOGNITION SWITCH CHECK
  5. END SENSOR LEVEL CHECK (HIGH)
  6. END SENSOR LEVEL CHECK (LOW)
  7. DEW SENSOR CHECK
  8. REEL TORQUE CHECK
  9. FWD/RVS TORQUE ADJUSTMENT
  10. DRUM/CAPSTAN SPEED & WOW CHECK
  11. TAPE PATH ADJUSTMENT
  12. SWP POSITION ADJUSTMENT
  13. PATH & FF/REW TIME CHECK
  14. PB ERROR RATE CHECK
  15. ----------
  16. ----------
  17. ----------
  18. SERVO DATA SAVE
  19. SERVO DATA DISPLAY
- 2. RECORDER MECHANICAL DECK ADJUSTMENT
  1. SERVO DATA PRESET
  2. PLUNGER CHECK
  3. MECHANICAL DEVICE TEST
  4. RECOGNITION SWITCH CHECK
  5. END SENSOR LEVEL CHECK (HIGH)
  6. END SENSOR LEVEL CHECK (LOW)
  7. DEW SENSOR CHECK
  8. REEL TORQUE CHECK
  9. FWD/RVS TORQUE ADJUSTMENT
  10. DRUM/CAPSTAN SPEED & WOW CHECK
  11. TAPE PATH ADJUSTMENT
  12. SWP POSITION ADJUSTMENT
  13. PATH & FF/REW TIME CHECK
  14. PB ERROR RATE CHECK
  15. REC CURRENT ADJUSTMENT(LEADING)
  16. REC CURRENT ADJUSTMENT(TRAILING)
  17. REC/PB ERROR RATE CHECK
  18. SERVO DATA SAVE
  19. SERVO DATA DISPLAY
- 3. TEST
  1. KEY/DIAL
  2. EL/LED
  3. RS-232C
  4. SSP-8 SIGNAL PATH
- 4. INFORMATION
  1. HOUR METER
  2. TAPE
  3. DIGITAL AUDIO INPUT
  4. KEY/WARNING LOG
  5. VERSION(V2.00 and Higher)

The service menu consists of the following;

- "1. PLAYER MECHANICAL DECK ADJUSTMENT" menu
  : This menu performs adjustment/tests of the player mechanical deck.
- "2. RECORDER MECHANICAL DEC ADJUSTMENT" menu
  : This menu performs adjustment/test of the recorder mechanical deck.
- "3. TEST" menu
  : This menu performs self-diagnosis.
- "4. INFORMATION" menu
  : This menu indicates various information on the hour meters and the tape.

How to enter the service menu

(1) Turn the power on, and press the MODE key while pressing the SHIFT key, and the menu (initial) will appear.
(2) Press function keys (F1 : [P-MD], F2 : [R-MD], F3 : [TEST], F4 : [INFORM]) corresponding to each menu.

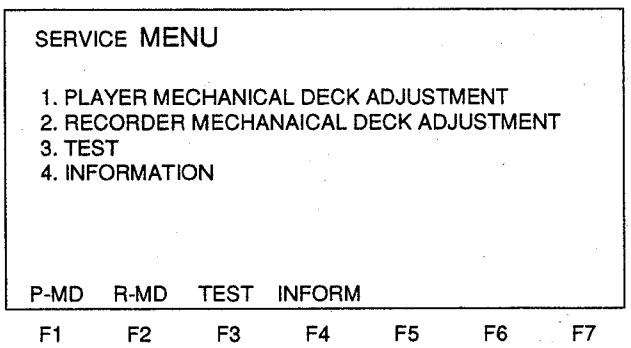

Service Menu (initial)

How to exit from the service menu

(1) Press the F2 [EXIT] key to get access to the initial display from the adjustment/test/information menus.
(2) To restore the normal mode, turn the power off and on again, and audio edit mode will be activated.

1-5-1. "1. PLAYER MECHANICAL DECK ADJUSTMENT" menu

This is described on the "SECTION 2 REPLACEMENT AND ADJUSTMENT OF MECHANISM DECK".

1-5-2. "2. RECORDER MECHANICAL DECK ADJUSTMENT" menu

This is described on the "SECTION 2 REPLACEMENT AND ADJUSTMENT OF MECHANISM DECK".

1-5-3. "3. TEST"menu

The test menu consists of the following;

1 KEY/DIAL : Key/dial (search dial, level/balance control) test
2 EL/DISPLAY : EL display/LED test
3 RS-232C : RS-232C loop back test
4 SSP-8 SIGNAL PATH : Audio signal path test for SSP-8 board

How to enter each test menu

Use ↑ and ↓ keys for selection, and press the F1 [TEST ON] key.

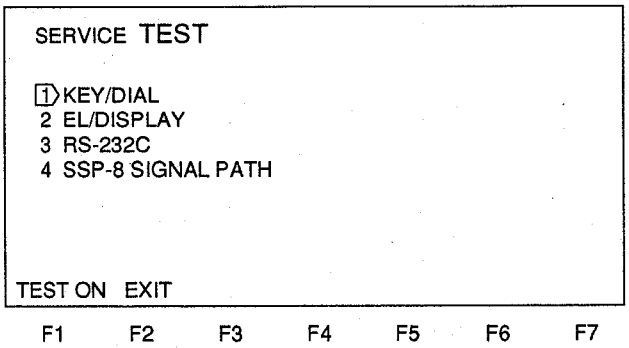

Test Menu (initial)

Menu	Description
1 KEY/DIAL **(Key/dial test)**	• Key test(41 places) : The key indication on the EL display flashes while the key is pressed, and it is cross-hatched when the key is released. • Dial test : Values are increased/decreased according to the turning direction(JOG dial or LEVEL/BALANCE control). **How to exit** Press the F1 [TEST OFF] key while pressing the SHIFT key.
2 EL/DISPLAY **(EL display/LED test)**	• EL disptay : All EL display indications come on → patterned → All EL display indications go off. • LED (21places) : All LEDs come on. **How to exit** Press the F1 [TEST OFF] key
3 RS-232C **(RS-232C loop back test)**	Data transferring/receiving and control signal inputting/ outputting of the RS-232C are chekced. **Procedure** (1) Prepare a 25-pin D-sub connector (male) of whitch pins are connected as follows: pin 2 (TXD) ——— pin3 (RXD) pin 4 (RTS) ——— pin 5 (CTS) pin 6 (DSR) ——— pin 20 (DTR) Then insert it into the RS-232C connector on the rear panel (PCM-E7700). (2) Press the F3 [START] key. Then the test will start and the results will be displayed. In case of an error (FAULT), the following on the SSP-8 board can be considered defective: • IC116(UPD71101); SCU(Serial Control Unit) • IC121(LT1134); RS-232C Driver/Receiver • Disconnection of CN102 or harnesses -WIRING SIDE- 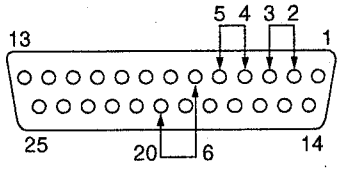 D-sub(25 pin male) **How to exit** Press the F1 [TEST OFF] key.
4 SSP-8 SIGNAL PATH **(Audio signal pathsignal path test for SSP-8 board)**	Input different audio signals into the analog/digital input connector and check whether or not audio output is available when the audio signal path on the SSP-8 board is changed over. **Procedure** (1) Input different audio signals to the analog/digital input connector. (2) Use ↓ and ↑ keys to change over the signal path, and check that analog or digital input audio signal displayed will be output. **Note** 1. As for PATH-10 and PATH-11, audio signal is not output because they are for inspection at shipment from the factory. 2. As for PATH-12, 1 kHz signal is output from the internal DSP irrespective of the type of the input audio. **How to exit** Press the F1 [TEST OFF] key.

Audio signal path block diagram (SSP-8 board)

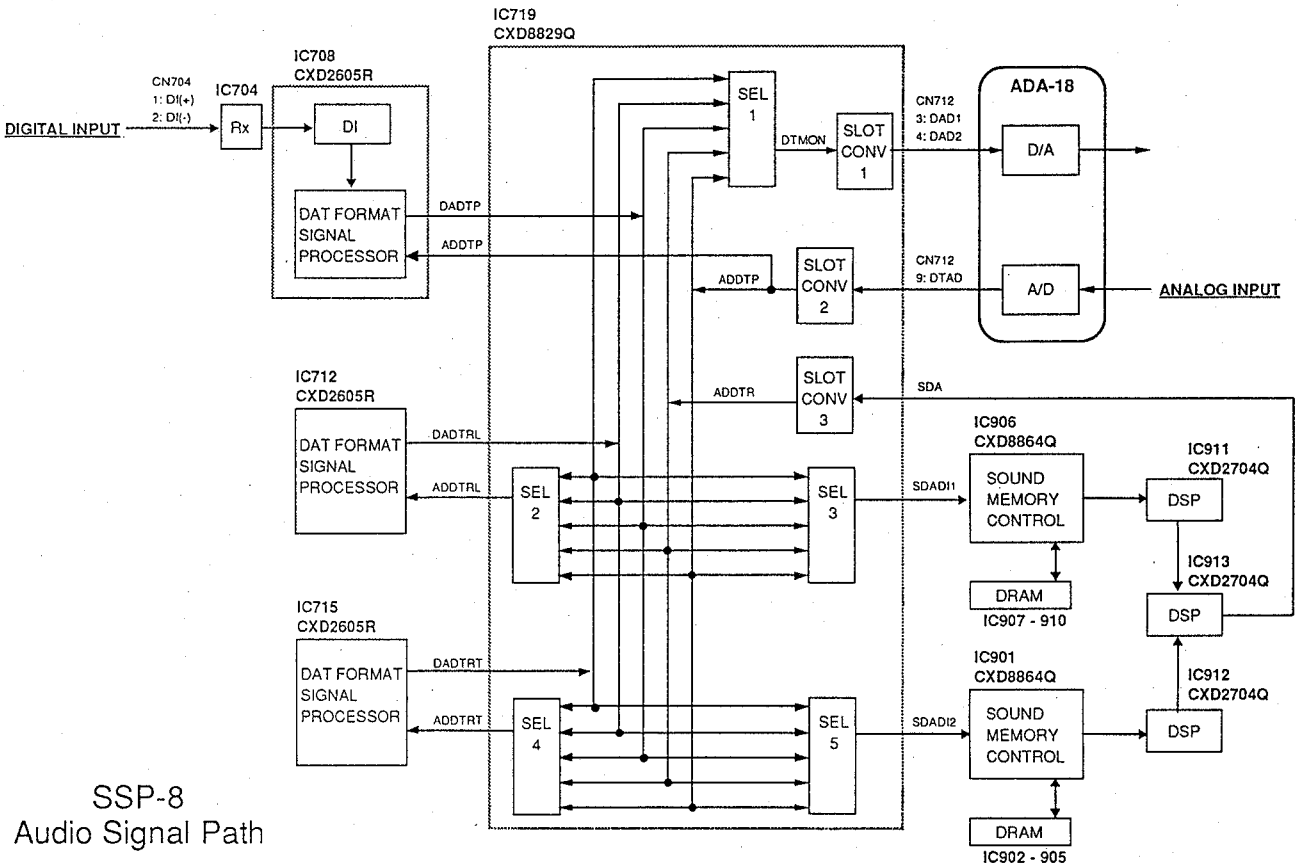

SSP-8
Audio Signal Path

Audio signal path No. and ICs (SSP-8 board)

PATH NO.	A/D ANALOG	IC704 AM26LS32 DIGITAL	IC708 CXD2605	IC712 CXD2605	IC715 CXD2605	IC719 CXD8829 SEL 1	SEL 2	SEL 3	SEL 4	SEL 5	CONV 1	CONV 2	CONV 3	IC906 CXD8864	IC907-910 DRAM	IC911 CXD2704	IC901 CXD8864	IC902-905 DRAM	IC912 CXD2704	IC913 CXD2704	D/A
PATH-1	○					○					○	○									○
PATH-2		○	○			○					○										○
PATH-3		○	○			○		○			○		○	○		○				○	○
PATH-4		○	○			○		○			○		○	○	○	○				○	○
PATH-5	○		○			○					○	○									○
PATH-6	○		○			○				○	○	○	○				○		○	○	○
PATH-7	○		○			○				○	○	○	○				○	○	○	○	○
PATH-8	○			○		○	○				○	○									○
PATH-9	○				○	○			○		○	○									○
PATH-10	○			○	○	○	○				○	○									○
PATH-11	○		○	○		○	○				○	○									○
PATH-12						○					○		○							○	○

1-5-4."4. INFORMATION" menu

The information menu consists of the following;
1 HOUR METER : Hour meter (integrating hour meter)
2 TAPE : Off tape data
3 DIGITAL AUDIO INPUT : Digital audio input signal
4 KEY/WARNING LOG : Key/warning log
5 VERSION : Version (V2.00 and Higher)

How to enter each information menu
Use ↓ and ↑ keys for selection, and press the F1 [ENTER] key.

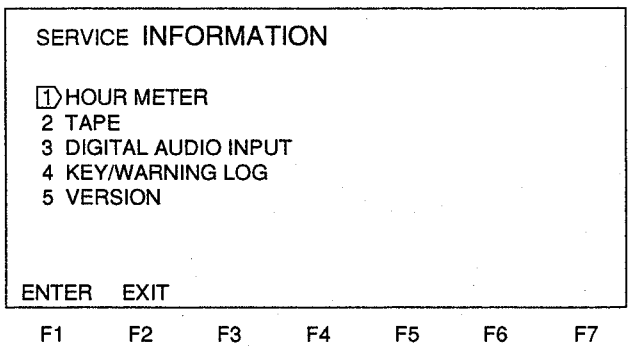

Information Menu (intial)

Menu	Description
1 HOUR METER **(Hour meter)**	The types of the hour meters are as follows: OPERATION METER : shows power-on time. The following three meters are assembled into each deck of the players and the recorders: DRUM RUNNING METER : shows drum rotation time. TAPE RUNNING METER : shows tape running time. THREADING/UNTHREDING COUNTER : shows No.of threading/unthreading. **How to exit** Press the F2 [EXIT] key.
2 TAPE **(Off tape data)**	In this menu, playback error rate and playback tape information are described. Playback tape information consists of three groups (1,2,and3), and use ↑ and ↓ keys for selection. • Tape running mode • Average error rate of A-ch and B-ch Group1 • Main ID ADRS : Frame Address F-ID : Format ID ID1 : Emphasis ID2 : Sampling Frequency ID3 : No. of Channels ID4 : Quantization ID5 : Track Pitch ID6 : Digital Copy ID7 : Pack • Sub ID DATA ID : Data ID TOC : TOC ID in control ID SKIP : Shortening ID in control ID START : Start ID in control ID PRIORITY : Priority ID in control ID PGM No. : Program No. PACK ID : Pack ID • Time code PRO R-TIME : Pro R time (H:M:S:F) A-TIME : Absolute time (H:M:S:F) TC MARKER : Time code marker in pro R time (decimal number) TC FORMAT : Time code flag in pro R time UBIT : Pro binary (user bit)

Menu	Description
	Group2 • The pack ID in the sub code and its recorded position: The pack ID recored in the sub code area and the recorded portion are indicated. The DAT frame (30 msec) consists of two tracks (A-ch and B-ch), and each track has two sub code areas such as SUB1 and SUB2. 28 packs (A-TIME, PRO R-TIME and so on) can be recorded in each area, and the total number of packs is 112 (28×2×2). 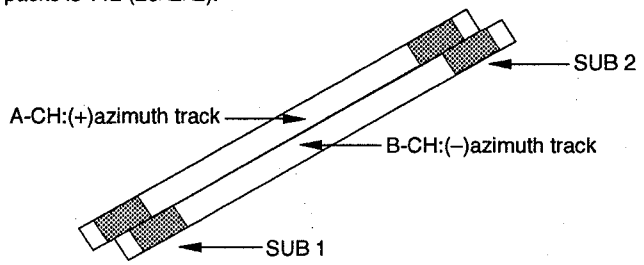 Group3 • Bit map meter*) of absolutely-converted 16 bit playback audio signal Bit 0 is at the left-side end and OVER is at the right-side end. (0000H~7FFFH, 80000H: OVER) bit0 bit14 OVER □ □ □ □ □ □ □ □ □ □ □ □ □ □ □ □ *)Bit map meter: Each bit of 16-bit audio data corresponds to one meter segment that will flash when the bit is "1". Operation key • Tape running key : [EJECT], [STOP], [PLAY], [FF], [REW], [SHUTTLE] key • Group switching : [↑], [↓] key. • Deck switching : [F3] [DECK] key. **How to exit** Press the [F2] [EXIT] key.
3 DIGITAL AUDIO INPUT (Digital audio input signal)	Receiving condition and channel status information are indicated. • PLL : LOCK/UNLOCK of the PLL circuit • FREQUENCY : Deviation of input signal freguency LOCK : About ± 1000 ppm or less UNLOCK : Over the range • Channel status (1) When PRO/CON is set to pro. DATA : Audio/non audio CHANNEL : Channel mode Fs ID : Sampling frequency ID EMPHASIS ID : Enphasis ID (2) When PRO/CON is set to consumer. CATEGORY : Category code Fs ID : Sampling frequency ID EMPHASIS ID : Emphasis ID COPY ID : Copy ID • Bit map meter of absolutely-coverted 16 bit input digital audio signal Bit 0 is at the left-side end, and OVER is at the right- side end. (0000H~7FFFH, 80000H: OVER) bit0 bit14 OVER □ □ □ □ □ □ □ □ □ □ □ □ □ □ □ □ **How to exit** Press the [F2] [EXIT] Key

Menu	Description
4 KEY/WARNING LOG (Key/warning log)	Log of keys pressed and warning errors are indicated. In this mode, however, key operation is not memorized. The capacity of the memory is 240 points (1 to 15 pages). • NO. : Serial No. • MODE : Operation mode • SUB MODE : Sub mode • KEY/WARNING : Key name or warning No. • DATE, TIME : Month/date, hour/minute/second When the SHIFT key is pressed at the same time, S appears by the key name. Operation key • Page switch : F6 [↑], F7 [↓] key • Memory clear : F4 [CLEAR] key **How to exit** Press the F2 [EXIT] key.
5 VERSION	Version of PLAYER, RECORDER and INTERFACE ROM are indicated. • Version History • Version • Checsum (8 bit type and 16 bit type) **How to exit** Press the F2 [EXIT] key.

SAFETY CHECK-OUT

After correcting the original service problem, perform the following safety checks before releasing the set to the customer:

Check the metal trim, "metallized" knobs, screws, and all other exposed metal parts for AC leakage. Check leakage as described below.

LEAKAGE TEST

The AC leakage from any exposed metal part to earth ground and from all exposed metal parts to any exposed metal part having a return to chassis, must not exceed 3.5mA. Leakage current can be measured by any one of three methods.

1. A commercial leakage tester, such as the Simpson 229 or RCA WT-540A. Follow the manufacturers' instructions to use these instruments.
2. A battery-operated AC milliammeter. The Data Precision 245 digital multimeter is suitable for this job.
3. Measuring the voltage drop across a resistor by means of a VOM or battery-operated AC voltmeter. The "limit" indication is 5.25V so analog meters must have an accurate low-voltage scale. The Simpson 250 and Sanwa SH-63Trd are examples of a passive VOM that is suitable. Nearly all battery operated digital multimeters that have a 20V AC range are suitable. (See Fig. A)

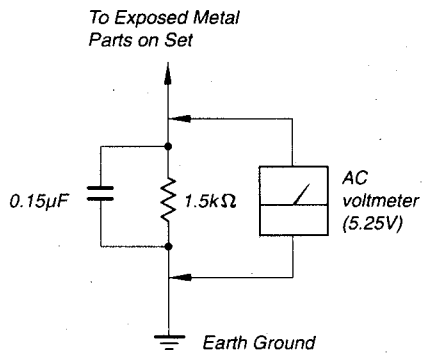

Fig. A. Using an AC voltmeter to check AC leakage.

CAUTION

Danger of explosion if battery is incorrectly replaced.

Replace only with the same or equivalent type recommended by the manufacturer.
Dispose of used batteries according to the manufacturer's instructions.

SECTION 4
BOARD LAYOUTS

	Board	Function	Page
A	ADA-31	Rec Audio,A/D Converter:PB Audio,D/A Converter	4-3
C	CP-233	Connector(ANALOG IN,DIGITAL IN)	4-7
	CP-234	Connector(MONITOR OUT)	4-7
H	HP-57	Headphones	4-8
K	KY-247	Eject Key	4-8
L	LED-160	Power Indicator	4-8
R	RF-53	RF Amplifier	4-7
S	SSP-8	System Control,Signal Processor	4-4
	SV-147	Servo	4-6
V	VR-154	Rotary Encoder(BALANCE)	4-8
	VR-181	Rotary Encoder(LEVEL)	4-8

OTHERS

CAPSTAN FLEXIBLE 4-6
GOMA 4-6
RECOGNI END FLEXIBLE 4-6
REEL FG 4-6
REEL FG.DEW FLEXIBLE 4-6
TENREGI 4-6
TENREGI MOTOR ENCODER FLEXIBLE 4-6

MECHANICAL DECK (PLAYER AND RECORDER) ASSY
CASE SECTION

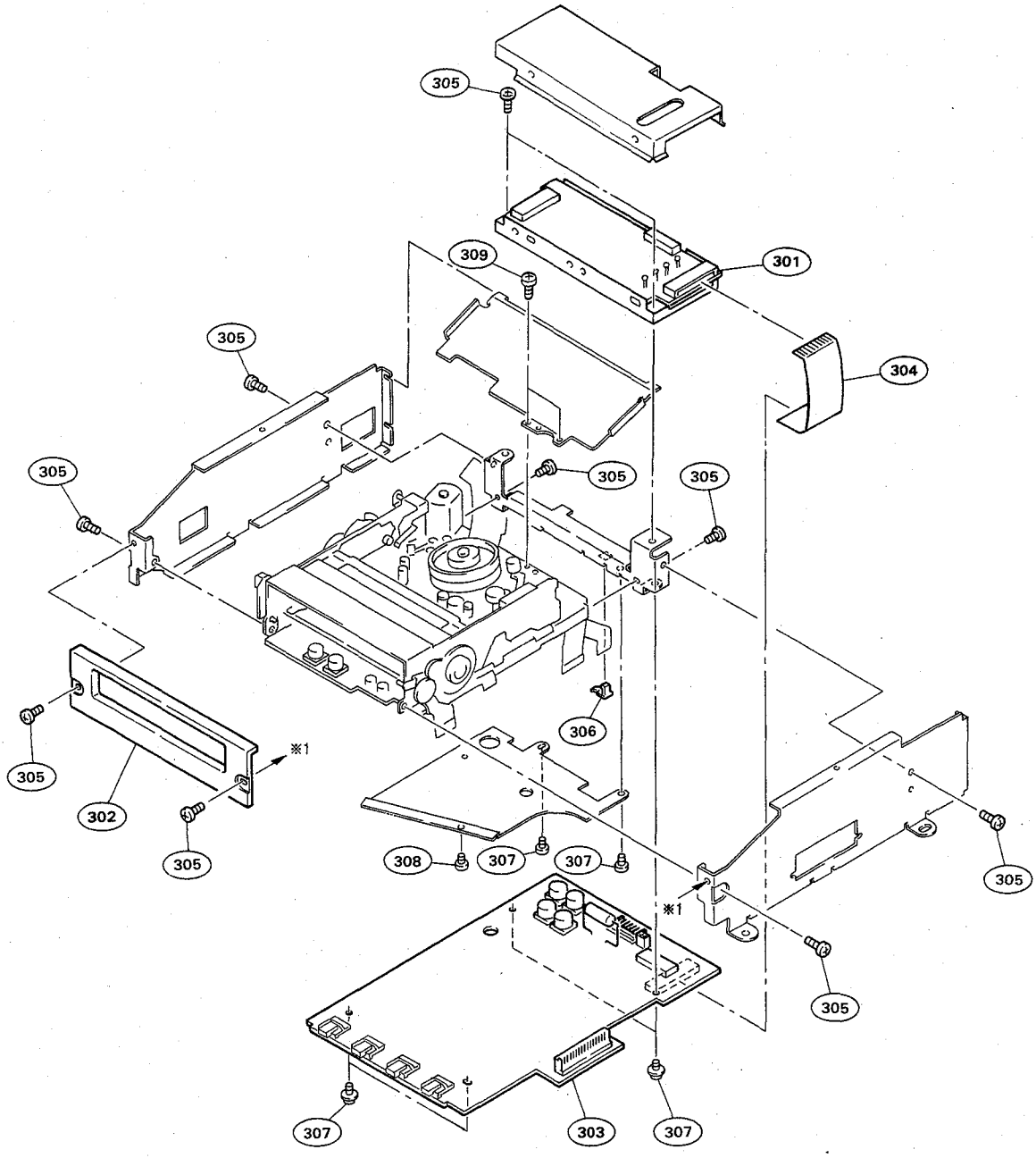

No.	Part No.	SP	Description
301	A-8310-132-A	o	RF-53 ASSY(RP)
302	A-8267-753-B	o	WINDOW ASSY, CASSETTE
303	A-8310-133-A	o	MOUNTED CIRCUIT BOARD, SV-147
304	1-764-402-11	s	WIRE, FLEXIBLE CARD(1.00MM)18P
305	3-374-615-11	s	SCREW(M2), BIND
306	3-671-150-11	o	CLAMP
307	3-703-502-21	s	SCREW
308	7-627-850-08	s	SCREW,PRECISION +P 1.4X2
309	7-627-850-47	s	SCREW,PRECISION +P 1.4X1.6

CASSETTE COMPARTMENT SECTION

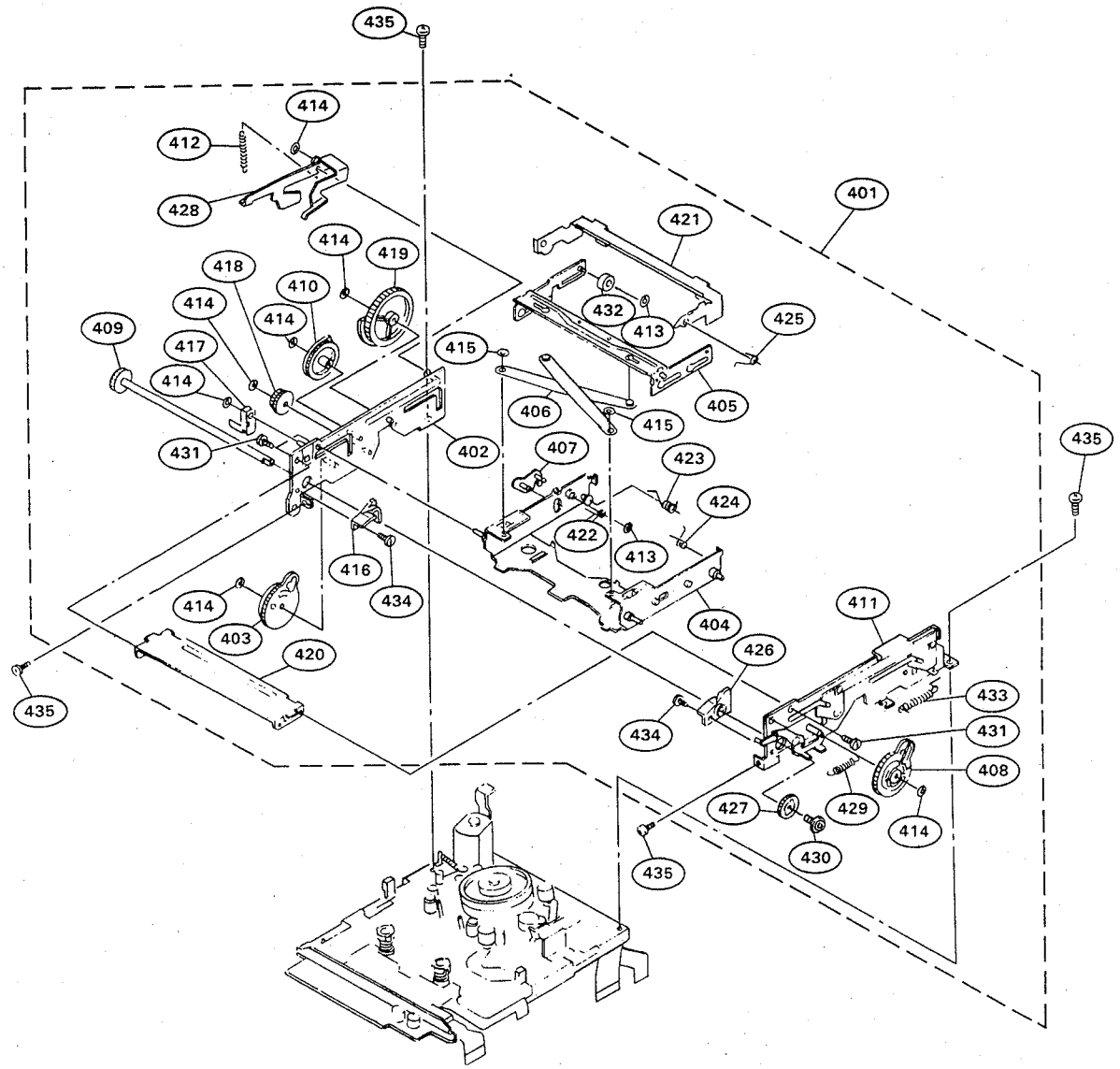

No.	Part No.	SP	Description
401	A-8267-998-B	s	CASSETTE COMPARTMENT ASSY
402	X-3363-985-5	s	PLATE (LEFT) ASSY, SIDE
403	X-3363-986-2	s	GEAR (LEVER LEFT) ASSY
404	X-3363-987-7	s	HOLDER ASSY, CASSETTE
405	X-3363-989-2	s	SLIDER (CASSETTE) ASSY
406	X-3363-990-1	s	LEVER ASSY, X
407	X-3363-991-3	s	LEVER ASSY, SLIDER LOCK
408	X-3363-995-2	s	GEAR (LEVER RIGHT) ASSY
409	X-3363-996-1	s	GEAR (JOINT) ASSY
410	X-3366-603-1	s	GEAR (C3) ASSY
411	X-3367-014-1	s	PLATE (RIGHT) ASSY, SIDE
412	3-140-263-99	s	SPRING, TENSION
413	3-321-393-01	s	WASHER, STOPPER
414	3-341-752-11	s	WASHER, POLYETHYLENE
415	3-341-753-11	s	WASHER, POLYETHYLENE
416	3-374-680-01	s	GUIDE (CASSETTE LEFT)
417	3-374-681-01	s	LEVER (SWITCH)
418	3-374-686-01	s	GEAR
419	3-374-688-01	s	GEAR (C2)
420	3-374-689-01	s	PLATE, JOINT

No.	Part No.	SP	Description
421	3-374-713-01	s	LEVER (CASSETTE)
422	3-374-720-01	s	SPRING (SLIDER LOCK), TORSION
423	3-374-721-02	s	SPRING (SLIDER RETURN),TORSION
424	3-374-722-01	s	SPRING (LID ARM), TORSION
425	3-374-723-01	s	SPRING(CASSETTE LEVER),TORSION
426	3-374-734-01	s	GUIDE (CASSETTE RIGHT)
427	3-374-739-01	s	GEAR (JOINT RIGHT)
428	3-388-228-02	s	LEVER (LID UP)
429	3-561-628-00	s	SPRING, TENSION
430	3-703-502-11	s	SCREW
431	3-703-816-31	s	SCREW (M1.4X1.6), SPECIAL HEAD
432	3-904-008-01	s	ROLLER
433	4-858-478-00	s	SPRING, TENSION
434	7-627-850-27	s	SCREW,PRECISION +P 1.4X3
435	7-627-850-47	s	SCREW,PRECISION +P 1.4X1.6

MECHANISM DECK SECTION (1)

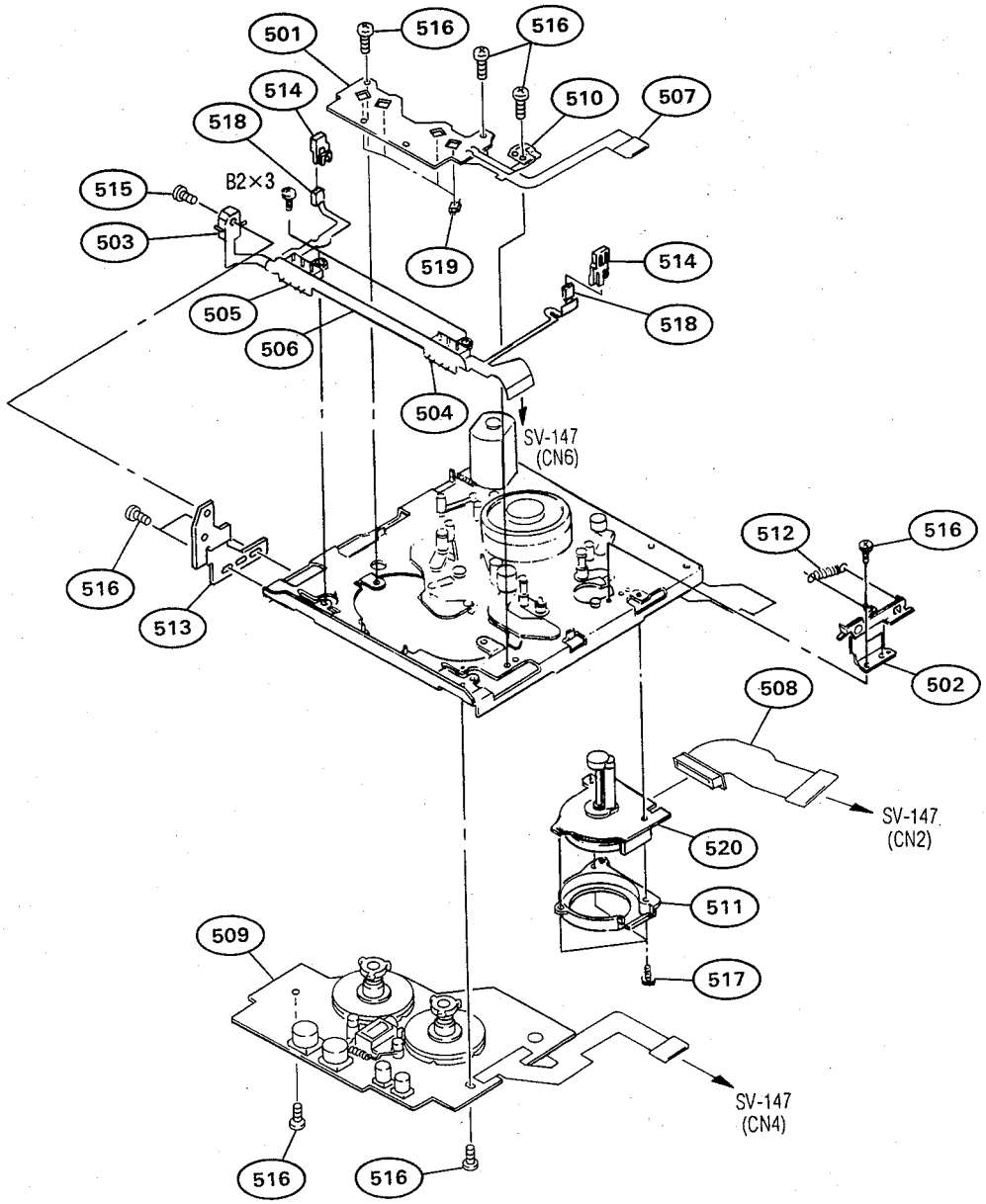

No.	Part No.	SP	Description
501	A-8276-769-A	o	MOUNTED CIRCUIT BOARD, REEL FG
502	X-3363-984-1	s	ARM ASSY, LID
503	1-570-771-11	s	SWITCH
504	1-572-950-11	s	SWITCH, PUSH
505	1-572-951-11	s	SWITCH, PUSH
506	1-642-056-12	s	PRINTED CIRCUIT BOARD, RECOGNI END FLEXIBLE
507	1-648-978-11	s	PRINTED CIRCUIT BOARD, REEL FG.DEW FLEXIBLE
508	1-648-979-11	s	PRINTED CIRCUIT BOARD, CAPSTAN FLEXIBLE
509	1-698-227-11	s	MOTOR, REEL
510	1-809-544-12	s	SENSOR, DEW CONDENSATION

No.	Part No.	SP	Description
511	3-374-654-01	s	COVER (MOTOR)
512	3-374-672-01	s	SPRING, TENSION
513	3-374-673-01	s	BRACKET (SWITCH)
514	3-374-674-01	s	HOLDER (ES)
515	7-627-553-67	s	SCREW,PRECISION +P 2X5
516	7-627-850-08	s	SCREW,PRECISION +P 1.4X2
517	7-627-850-27	s	SCREW,PRECISION +P 1.4X3
518	8-729-907-25	s	PHOTO TRANSISTOR PT4850F
519	8-759-057-48	s	PHOTO REFLECTOR NJL5803K-F10
520	8-835-329-12	s	MOTOR, DC U-21A

MECHANISM DECK SECTION (2)

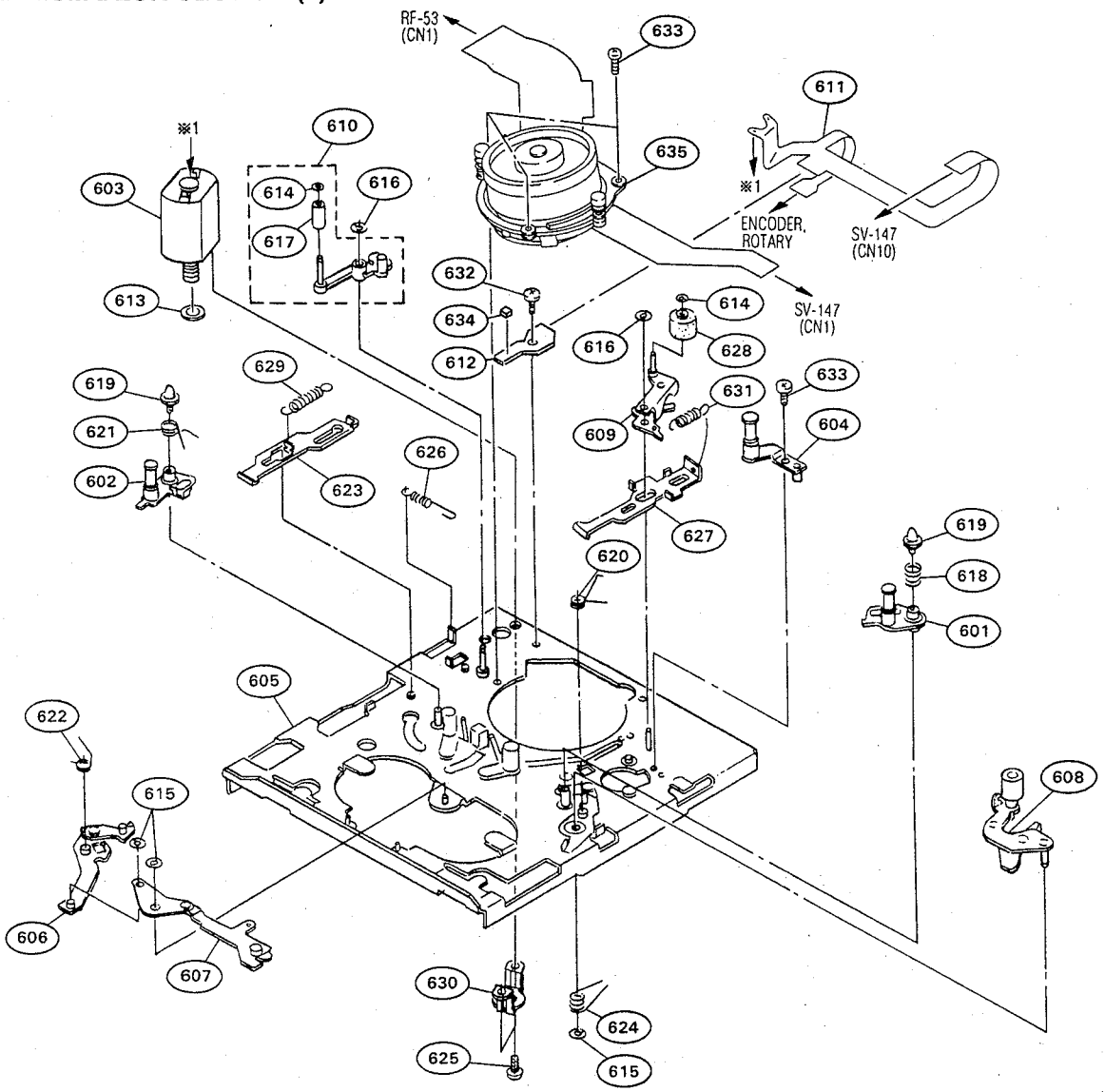

No.	Part No.	SP	Description
601	A-8267-743-A	s	ROLLER ASSY, RG
602	A-8267-744-A	s	ROLLER ASSY, LG
603	A-8267-759-A	s	MOTOR ASSY, DRIVE
604	A-8267-761-A	s	GUIDE ASSY, ROLLER
605	X-3363-963-1	o	CHASSIS ASSY
606	X-3363-965-1	s	LEVER ASSY, CAM
607	X-3363-966-1	s	LEVER ASSY, LR
608	X-3363-976-1	s	PINCH ROLLER ASSY
609	X-3363-983-1	s	ARM ASSY, CR
610	X-3366-602-1	s	TENSION REGULATOR ASSY
611	1-648-976-12	s	PRINTED CIRCUIT BOARD, TENTEGI MOTER ENCODER FLEXIBLE
612	1-648-982-11	o	PRINTED CIRCUIT BOARD, TENREGI
613	3-320-354-21	s	WASHER
614	3-321-393-01	s	WASHER, STOPPER
615	3-341-752-11	s	WASHER, POLYETHYLENE
616	3-341-753-11	s	WASHER, POLYETHYLENE
617	3-360-866-01	s	ROLLER (TENSION REGULATOR)
618	3-374-604-01	s	SPRING, COMPRESSION
619	3-374-605-01	s	SHAFT (CASSETTE)
620	3-374-606-01	s	SPRING (R), TORSION

No.	Part No.	SP	Description
621	3-374-608-01	s	SPRING (LF), TORSION
622	3-374-609-03	s	SPRING (L), TORSION
623	3-374-610-02	s	SLIDER
624	3-374-635-01	s	SPRING (P), TORSION
625	3-374-657-01	s	SCREW (M2X2)
626	3-374-662-01	s	SPRING, TENSION
627	3-374-665-01	s	SLIDER, CR
628	3-375-727-01	s	ROLLER (HC)
629	3-375-728-01	s	SPRING, TENSION
630	3-379-832-01	s	RETAINER, THRUST
631	3-570-776-01	s	SPRING, TENSION
632	7-627-850-08	s	SCREW,PRECISION +P 1.4X2
633	7-627-850-27	s	SCREW,PRECISION +P 1.4X3
634	8-719-821-03	s	ELEMENT, HALL THS117
635	8-848-611-11	s	DRUM ASSY DOU-21A-R (For MT-PCM-E7700 P-103,PLAYER)
	8-848-612-11	s	DRUM ASSY DOU-22A-R (For MT-PCM-E7700 R-103,RECORDER)

MECHANISM DECK SECTION (3)

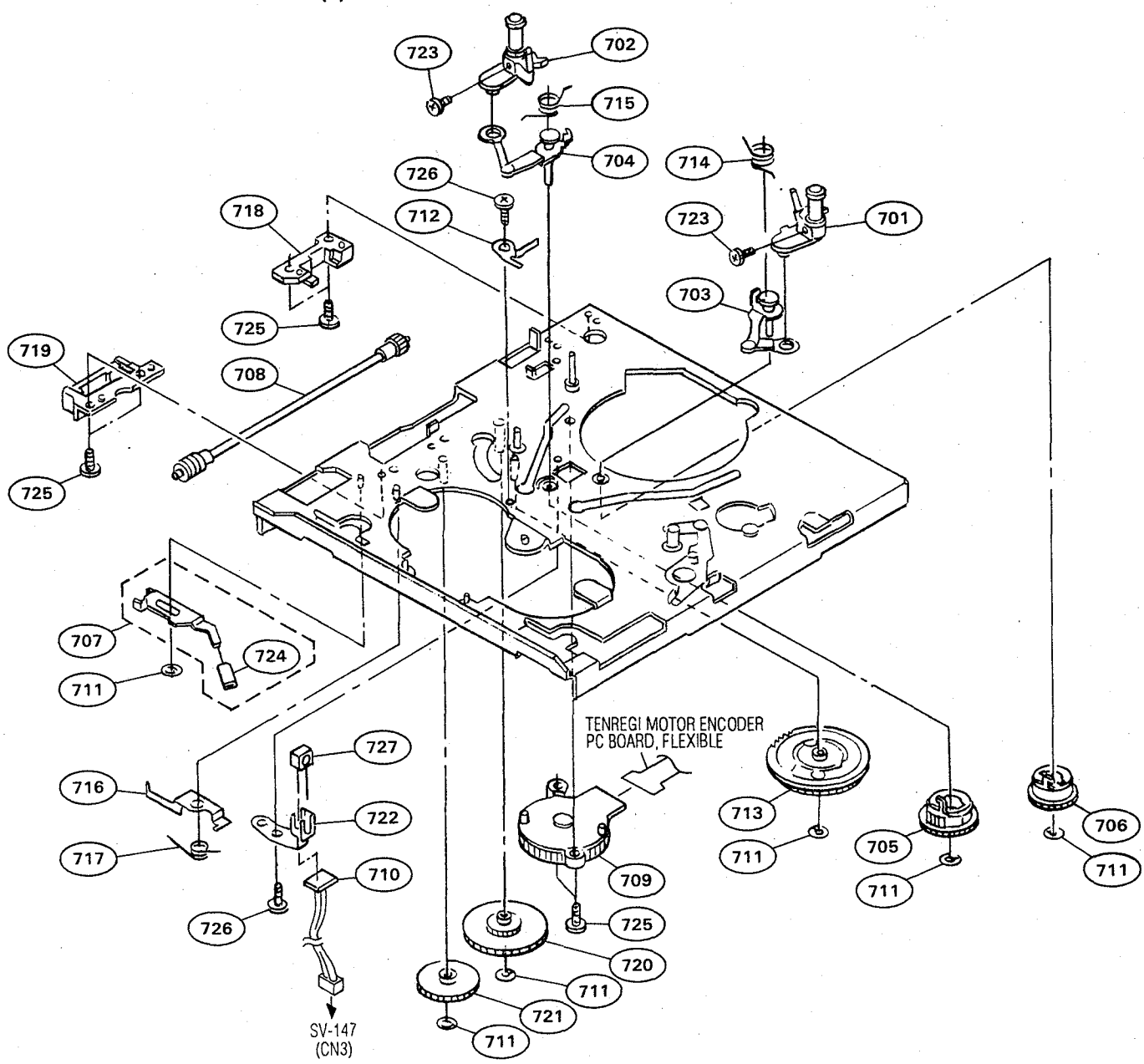

No.	Part No.	SP	Description
701	X-3363-969-1	s	ROLLER ASSY, SLANT GUIDE (T)
702	X-3363-972-3	s	ROLLER ASSY, SLANT GUIDE (S)
703	X-3363-974-1	s	ARM (T) ASSY, LOADING
704	X-3363-975-1	s	ARM (S) ASSY, LOADING
705	X-3363-978-1	s	GEAR (S) ASSY, LOADING
706	X-3363-979-3	s	GEAR (T) ASSY, LOADING
707	X-3363-980-1	s	PLATE ASSY, SPOOL, REEL
708	X-3363-981-1	s	GEAR ASSY, DRIVE
709	1-466-670-21	s	ENCODER, ROTARY
710	1-642-088-11	o	PRINTED CIRCUIT BOARD, GOMA
711	3-341-753-11	s	WASHER, POLYETHYLENE
712	3-374-628-02	s	PLATE, LOAD, PRE
713	3-374-636-01	s	GEAR, CAM
714	3-374-641-01	s	SPRING (T), TORSION
715	3-374-642-02	s	SPRING (S), TORSION

No.	Part No.	SP	Description
716	3-374-645-01	o	RETAINER, SPOOL PLATE
717	3-374-646-01	s	SPRING (SPOOL PLATE), TORSION
718	3-374-647-01	s	RETAINER (A), DRIVE SHAFT
719	3-374-648-01	s	RETAINER (B), DRIVE SHAFT
720	3-374-652-01	s	GEAR (M2)
721	3-374-653-01	s	GEAR (MD WHEEL)
722	3-374-655-01	s	BRACKET (LED)
723	3-704-246-31	s	SCREW (P1.4X2.5)
724	4-866-397-00	o	CUSHION, LED
725	7-627-850-27	s	SCREW,PRECISION +P 1.4X3
726	7-627-850-47	s	SCREW,PRECISION +P 1.4X1.6
727	8-719-988-42	s	DIODE GL453S

7-3. ELECTRICAL PARTS LIST

Replacements for capacitors and resistors not given in each board parts lists are shown below.
If a capacitor with the desired working voltage is not found, choose one of higher working voltage.

CAPACITOR, CHIP CERAMIC

Part No.	SP	Description			
1-163-019-00	s	CAP, CHIP CERAMIC	6800pF	10%	50V
1-163-038-00	s	CAP, CHIP CERAMIC	0.1		25V
1-163-125-00	s	CAP, CHIP CERAMIC	220pF	5%	50V
1-163-127-00	s	CAP, CHIP CERAMIC	270pF	5%	50V
1-163-131-00	s	CAP, CHIP CERAMIC	390pF	5%	50V
1-163-133-00	s	CAP, CHIP CERAMIC	470pF	5%	50V
1-163-227-11	s	CAP, CHIP CERAMIC	10pF	5%	50V
1-163-229-11	s	CAP, CHIP CERAMIC	12pF	5%	50V
1-163-235-11	s	CAP, CHIP CERAMIC	22pF	5%	50V
1-163-239-11	s	CAP, CHIP CERAMIC	33pF	5%	50V
1-163-243-11	s	CAP, CHIP CERAMIC	47pF	5%	50V
1-163-251-11	s	CAP, CHIP CERAMIC	100pF	5%	50V
1-163-257-11	s	CAP, CHIP CERAMIC	180pF	5%	50V
1-163-275-11	s	CAP, CHIP CERAMIC	0.001	5%	50V
1-163-833-00	s	CAP, CHIP CERAMIC	0.068		25V

CAPACITOR, CHIP TANTALUM

Part No.	SP	Description			
1-135-073-00	s	CAP, CHIP TANTALUM	0.33	10%	35V
1-135-208-11	s	CAP, CHIP TANTALUM	1	20%	10V
1-135-217-21	s	CAP, CHIP TANTALUM	15	20%	6.3V
1-135-227-11	s	CAP, CHIP TANTALUM	100	20%	6.3V
1-135-259-11	s	CAP, CHIP TANTALUM	10	20%	6.3V

RESISTOR, CHIP

Part No.	SP	Description			
1-216-001-00	s	RES, CHIP	10	5%	1/10W
1-216-009-00	s	RES, CHIP	22	5%	1/10W
1-216-017-00	s	RES, CHIP	47	5%	1/10W
1-216-021-00	s	RES, CHIP	68	5%	1/10W
1-216-025-00	s	RES, CHIP	100	5%	1/10W
1-216-029-00	s	RES, CHIP	150	5%	1/10W
1-216-033-00	s	RES, CHIP	220	5%	1/10W
1-216-035-00	s	RES, CHIP	270	5%	1/10W
1-216-037-00	s	RES, CHIP	330	5%	1/10W
1-216-039-00	s	RES, CHIP	390	5%	1/10W
1-216-041-00	s	RES, CHIP	470	5%	1/10W
1-216-049-00	s	RES, CHIP	1K	5%	1/10W
1-216-051-00	s	RES, CHIP	1.2K	5%	1/10W
1-216-055-00	s	RES, CHIP	1.8K	5%	1/10W
1-216-057-00	s	RES, CHIP	2.2K	5%	1/10W
1-216-063-00	s	RES, CHIP	3.9K	5%	1/10W
1-216-065-00	s	RES, CHIP	4.7K	5%	1/10W
1-216-071-00	s	RES, CHIP	8.2K	5%	1/10W
1-216-073-00	s	RES, CHIP	10K	5%	1/10W
1-216-075-00	s	RES, CHIP	12K	5%	1/10W
1-216-077-00	s	RES, CHIP	15K	5%	1/10W
1-216-079-00	s	RES, CHIP	18K	5%	1/10W
1-216-081-00	s	RES, CHIP	22K	5%	1/10W
1-216-083-00	s	RES, CHIP	27K	5%	1/10W
1-216-085-00	s	RES, CHIP	33K	5%	1/10W
1-216-089-91	s	RES, CHIP	47K	5%	1/10W
1-216-095-00	s	RES, CHIP	82K	5%	1/10W
1-216-097-00	s	RES, CHIP	100K	5%	1/10W
1-216-103-91	s	RES, CHIP	180K	5%	1/10W
1-216-107-00	s	RES, CHIP	270K	5%	1/10W
1-216-113-00	s	RES, CHIP	470K	5%	1/10W
1-216-121-00	s	RES, CHIP	1.0M	5%	1/10W
1-216-295-00	s	RES, CHIP	0	5%	1/10W
1-216-308-00	s	RES, CHIP	4.7	5%	1/10W

ADA-31 BOARD

Ref. No. or Q'ty	Part No.	SP	Description
1pc	A-8275-317-A	o	MOUNTED CIRCUIT BOARD, ADA-31
(This assembly includes the following parts.)			
C1	1-124-589-11	s	ELECT 47uF 20% 16V
C13	1-124-261-00	s	ELECT 10uF 20% 50V
C14	1-124-261-00	s	ELECT 10uF 20% 50V
C20	1-126-157-11	s	ELECT 10uF 20% 16V
C21	1-126-157-11	s	ELECT 10uF 20% 16V
C24	1-126-157-11	s	ELECT 10uF 20% 16V
C25	1-124-234-00	s	ELECT 22uF 20% 16V
#C101	1-163-275-11	s	CERAMIC, CHIP 0.001uF 5% 50V
C102	1-124-282-00	s	ELECT, NONPOLAR 22uF 20% 25V
C103	1-124-282-00	s	ELECT, NONPOLAR 22uF 20% 25V
#C104	1-163-251-11	s	CERAMIC, CHIP 100pF 5% 50V
#C105	1-163-275-11	s	CERAMIC, CHIP 0.001uF 5% 50V
#C107	1-163-239-11	s	CERAMIC, CHIP 33pF 5% 50V
C118	1-126-096-11	s	ELECT 10uF 20% 35V
C121	1-124-282-00	s	ELECT, NONPOLAR 22uF 20% 25V
C123	1-126-163-11	s	ELECT 4.7uF 20% 50V
C124	1-164-232-11	s	CERAMIC, CHIP 0.01uF 10% 100V
C125	1-164-232-11	s	CERAMIC, CHIP 0.01uF 10% 100V
#C201	1-163-275-11	s	CERAMIC, CHIP 0.001uF 5% 50V
C202	1-124-282-00	s	ELECT, NONPOLAR 22uF 20% 25V
C203	1-124-282-00	s	ELECT, NONPOLAR 22uF 20% 25V
#C204	1-163-251-11	s	CERAMIC, CHIP 100pF 5% 50V
#C205	1-163-275-11	s	CERAMIC, CHIP 0.001uF 5% 50V
#C207	1-163-239-11	s	CERAMIC, CHIP 33pF 5% 50V
C218	1-126-096-11	s	ELECT 10uF 20% 35V
C221	1-124-282-00	s	ELECT, NONPOLAR 22uF 20% 25V
C223	1-126-163-11	s	ELECT 4.7uF 20% 50V
C224	1-164-232-11	s	CERAMIC, CHIP 0.01uF 10% 100V
C225	1-164-232-11	s	CERAMIC, CHIP 0.01uF 10% 100V
C309	1-124-282-00	s	ELECT, NONPOLAR 22uF 20% 25V
C310	1-164-232-11	s	CERAMIC, CHIP 0.01uF 10% 100V
#C312	1-163-275-11	s	CERAMIC, CHIP 0.001uF 5% 50V
C409	1-124-282-00	s	ELECT, NONPOLAR 22uF 20% 25V
C410	1-164-232-11	s	CERAMIC, CHIP 0.01uF 10% 100V
#C412	1-163-275-11	s	CERAMIC, CHIP 0.001uF 5% 50V
C501	1-126-096-11	s	ELECT 10uF 20% 35V
C503	1-124-282-00	s	ELECT, NONPOLAR 22uF 20% 25V
C504	1-124-282-00	s	ELECT, NONPOLAR 22uF 20% 25V
C505	1-126-096-11	s	ELECT 10uF 20% 35V
C507	1-126-163-11	s	ELECT 4.7uF 20% 50V
C508	1-164-232-11	s	CERAMIC, CHIP 0.01uF 10% 100V
C510	1-126-096-11	s	ELECT 10uF 20% 35V
C511	1-164-232-11	s	CERAMIC, CHIP 0.01uF 10% 100V
C514	1-124-261-00	s	ELECT 10uF 20% 50V
#C515	1-124-261-00	s	ELECT 10uF 20% 50V
C517	1-124-261-00	s	ELECT 10uF 20% 50V
C519	1-124-261-00	s	ELECT 10uF 20% 50V
C521	1-126-096-11	s	ELECT 10uF 20% 35V
C522	1-164-489-11	s	CERAMIC, CHIP 0.22uF 10% 16V
C523	1-164-232-11	s	CERAMIC, CHIP 0.01uF 10% 100V
C524	1-126-157-11	s	ELECT 10uF 20% 16V
C602	1-126-096-11	s	ELECT 10uF 20% 35V
C603	1-126-096-11	s	ELECT 10uF 20% 35V
C604	1-126-096-11	s	ELECT 10uF 20% 35V
C605	1-126-096-11	s	ELECT 10uF 20% 35V
C702	1-126-923-11	s	ELECT 220uF 20% 10V

NOTE: Please see page 7-10 for the parts that are not listed in the parts list.

(ADA-31 BOARD)

Ref. No. or Q'ty	Part No.	SP	Description
C802	1-126-096-11	s	ELECT 10uF 20% 35V
C804	1-124-589-11	s	ELECT 47uF 20% 16V
C805	1-124-589-11	s	ELECT 47uF 20% 16V
C807	1-126-096-11	s	ELECT 10uF 20% 35V
C809	1-124-589-11	s	ELECT 47uF 20% 16V
C810	1-124-589-11	s	ELECT 47uF 20% 16V
C930	1-126-096-11	s	ELECT 10uF 20% 35V
C931	1-126-096-11	s	ELECT 10uF 20% 35V
CN1	1-564-005-11	o	CONNECTOR 6P, MALE
CN2	1-506-480-11	s	CONNECTOR 15P, MALE
CN3	1-506-474-11	s	CONNECTOR 9P, MALE
CN4	1-506-469-11	s	CONNECTOR 4P, MALE
CN5	1-564-011-11	o	CONNECTOR 12P, MALE
CP501	1-466-175-11	s	FILTER UNIT, LOW-PASS
D1	8-719-028-74	s	DIODE NSQ03A04
D2	8-719-028-74	s	DIODE NSQ03A04
D3	8-719-028-74	s	DIODE NSQ03A04
D4	8-719-028-74	s	DIODE NSQ03A04
D6	8-719-941-23	s	DIODE DA204U
D7	8-719-941-23	s	DIODE DA204U
D8	8-719-210-33	s	DIODE EC10DS2
D9	8-719-941-23	s	DIODE DA204U
D10	8-719-941-23	s	DIODE DA204U
D11	8-719-941-23	s	DIODE DA204U
D12	8-719-941-23	s	DIODE DA204U
D101	8-719-941-23	s	DIODE DA204U
D102	8-719-941-23	s	DIODE DA204U
D103	8-719-941-23	s	DIODE DA204U
D104	8-719-941-23	s	DIODE DA204U
D105	8-719-941-23	s	DIODE DA204U
D106	8-719-941-23	s	DIODE DA204U
D201	8-719-941-23	s	DIODE DA204U
D202	8-719-941-23	s	DIODE DA204U
D203	8-719-941-23	s	DIODE DA204U
D204	8-719-941-23	s	DIODE DA204U
D206	8-719-941-23	s	DIODE DA204U
D207	8-719-941-23	s	DIODE DA204U
D501	8-719-941-23	s	DIODE DA204U
D502	8-719-941-23	s	DIODE DA204U
D503	8-719-941-23	s	DIODE DA204U
D504	8-719-941-23	s	DIODE DA204U
D801	8-719-210-33	s	DIODE EC10DS2
D901	8-719-210-33	s	DIODE EC10DS2
D902	8-719-210-33	s	DIODE EC10DS2
IC1	8-759-999-09	s	IC CS5326-KP
IC2	8-759-701-84	s	IC NJM7905FA
IC3	8-759-701-75	s	IC NJM7805FA
IC4	8-759-701-59	s	IC NJM78M09FA
IC5	8-759-701-87	s	IC NJM7909FA
IC9	8-759-925-90	s	IC SN74HC74NS
IC10	8-759-925-90	s	IC SN74HC74NS
IC11	8-759-927-46	s	IC SN74HC00NS
IC101	8-759-208-09	s	IC TC4052BFHB
IC102	8-759-745-64	s	IC NJM4560M
IC103	8-759-234-77	s	IC TC4S66F
IC104	8-759-745-64	s	IC NJM4560M
IC105	8-759-745-64	s	IC NJM4560M
IC106	8-759-234-77	s	IC TC4S66F

NOTE: For # marked in the parts list, refer to "SECTION 8 CHANGED PARTS".

(ADA-31 BOARD)

Ref. No. or Q'ty	Part No.	SP	Description
IC201	8-759-208-09	s	IC TC4052BFHB
IC202	8-759-745-64	s	IC NJM4560M
IC203	8-759-234-77	s	IC TC4S66F
IC204	8-759-745-64	s	IC NJM4560M
IC205	8-759-745-64	s	IC NJM4560M
IC206	8-759-234-77	s	IC TC4S66F
IC301	8-759-998-22	s	IC PCM56P
IC302	8-759-745-64	s	IC NJM4560M
IC303	8-759-234-77	s	IC TC4S66F
IC401	8-759-998-22	s	IC PCM56P
IC402	8-759-745-64	s	IC NJM4560M
IC403	8-759-234-77	s	IC TC4S66F
IC501	8-759-700-45	s	IC NJM4556M-A
IC502	8-759-745-64	s	IC NJM4560M
IC503	8-759-701-02	s	IC NJM2073M
IC701	8-759-973-71	s	IC TL7705CPS-B
IC901	8-759-234-77	s	IC TC4S66F
IC902	8-759-234-77	s	IC TC4S66F
L4	1-410-482-31	s	INDUCTOR 100uH
L5	1-410-482-31	s	INDUCTOR 100uH
L6	1-410-482-31	s	INDUCTOR 100uH
L502	1-410-482-31	s	INDUCTOR 100uH
L503	1-410-482-31	s	INDUCTOR 100uH
L801	1-412-533-21	s	INDUCTOR 47UH
L802	1-412-533-21	s	INDUCTOR 47UH
Q4	8-729-901-05	s	TRANSISTOR DTA124EK
Q501	8-729-901-05	s	TRANSISTOR DTA124EK
Q502	8-729-901-00	s	TRANSISTOR DTC124EK
Q503	8-729-140-98	s	TRANSISTOR 2SD773-3
Q504	8-729-901-05	s	TRANSISTOR DTA124EK
Q505	8-729-901-00	s	TRANSISTOR DTC124EK
Q801	8-729-901-05	s	TRANSISTOR DTA124EK
Q802	8-729-901-00	s	TRANSISTOR DTC124EK
Q803	8-729-901-05	s	TRANSISTOR DTA124EK
Q804	8-729-901-00	s	TRANSISTOR DTC124EK
Q805	8-729-901-00	s	TRANSISTOR DTC124EK
Q806	8-729-901-05	s	TRANSISTOR DTA124EK
Q807	8-729-901-05	s	TRANSISTOR DTA124EK
Q808	8-729-901-00	s	TRANSISTOR DTC124EK
Q809	8-729-140-98	s	TRANSISTOR 2SD773-3
#Q901	8-729-901-00	s	TRANSISTOR DTC124EK
#Q902	8-729-901-05	s	TRANSISTOR DTA124EK
#R12	1-216-103-91	s	METAL, CHIP 180K 5% 1/10W
#R13	1-216-295-00	s	METAL, CHIP 0 5% 1/10W
#R137	1-216-107-00	s	METAL, CHIP 270K 5% 1/10W
#R144	1-216-113-00	s	METAL, CHIP 470K 5% 1/10W
#R146	1-216-121-00	s	METAL, CHIP 1.0M 5% 1/10W
#R153	1-216-097-00	s	METAL, CHIP 100K 5% 1/10W
#R237	1-216-107-00	s	METAL, CHIP 270K 5% 1/10W
#R244	1-216-113-00	s	METAL, CHIP 470K 5% 1/10W
#R246	1-216-121-00	s	METAL, CHIP 1.0M 5% 1/10W
#R253	1-216-097-00	s	METAL, CHIP 100K 5% 1/10W
#R414	1-216-073-00	s	METAL, CHIP 10K 5% 1/10W
#R513	1-216-025-00	s	METAL, CHIP 100 5% 1/10W
#R514	1-216-025-00	s	METAL, CHIP 100 5% 1/10W
#R903	1-216-295-00	s	METAL, CHIP 0 5% 1/10W
#R904	1-216-295-00	s	METAL, CHIP 0 5% 1/10W

NOTE: Please see page 7-10 for the parts that are not listed in the parts list.

(ADA-31 BOARD)

Ref. No. or Q'ty	Part No.	SP	Description
#R905	1-216-097-00	s	METAL, CHIP 100K 5% 1/10W
RV101	1-241-631-11	s	RES, ADJ CARBON 22K
RV201	1-241-631-11	s	RES, ADJ CARBON 22K
RV301	1-241-630-11	s	RES, ADJ CARBON 10K
RV401	1-241-630-11	s	RES, ADJ CARBON 10K
#RV901	1-241-628-11	s	RES, ADJ CARBON 2.2K
#RV902	1-241-628-11	s	RES, ADJ CARBON 2.2K
RY501	1-515-716-11	s	RELAY
RY502	1-515-716-11	s	RELAY
RY801	1-515-716-11	s	RELAY

NOTE: For # marked in the parts list, refer to "SECTION 8 CHANGED PARTS".

CP-233A BOARD (For UC, EK)

Ref. No. or Q'ty	Part No.	SP	Description
1pc	1-650-076-11	o	PRINTED CIRCUIT BOARD, CP-233
C1	1-164-182-11	s	CERAMIC, CHIP 3300pF 10% 100V
C2	1-164-182-11	s	CERAMIC, CHIP 3300pF 10% 100V
C4	1-164-182-11	s	CERAMIC, CHIP 3300pF 10% 100V
C5	1-164-182-11	s	CERAMIC, CHIP 3300pF 10% 100V
CN1	1-564-005-11	o	CONNECTOR 6P, MALE
CN2	1-565-284-11	o	CONNECTOR, XLR 3P, FEMALE
CN3	1-565-284-11	o	CONNECTOR, XLR 3P, FEMALE
CN4	1-565-284-11	o	CONNECTOR, XLR 3P, FEMALE
CN5	1-564-002-11	s	CONNECTOR 3P, MALE
FB1	1-412-694-11	s	INDUCTOR, BEED
FB2	1-412-694-11	s	INDUCTOR, BEED
FB11	1-412-694-11	s	INDUCTOR, BEED
FB12	1-412-694-11	s	INDUCTOR, BEED
FB13	1-412-694-11	s	INDUCTOR, BEED
FB14	1-412-694-11	s	INDUCTOR, BEED
FB15	1-412-694-11	s	INDUCTOR, BEED
FB16	1-412-694-11	s	INDUCTOR, BEED
FB21	1-412-694-11	s	INDUCTOR, BEED
FB22	1-412-694-11	s	INDUCTOR, BEED
FB23	1-412-694-11	s	INDUCTOR, BEED
FB24	1-412-694-11	s	INDUCTOR, BEED
FB25	1-412-694-11	s	INDUCTOR, BEED
FB26	1-412-694-11	s	INDUCTOR, BEED

CP-233B BOARD (For J)

Ref. No. or Q'ty	Part No.	SP	Description
1pc	1-650-076-11	o	PRINTED CIRCUIT BOARD, CP-233
C1	1-164-182-11	s	CERAMIC, CHIP 3300pF 10% 100V
C2	1-164-182-11	s	CERAMIC, CHIP 3300pF 10% 100V
C4	1-164-182-11	s	CERAMIC, CHIP 3300pF 10% 100V
C5	1-164-182-11	s	CERAMIC, CHIP 3300pF 10% 100V
CN1	1-564-005-11	o	CONNECTOR 6P, MALE
CN2	1-565-283-11	o	CONNECTOR, XLR 3P, MALE
CN3	1-565-283-11	o	CONNECTOR, XLR 3P, MALE
CN4	1-565-284-11	o	CONNECTOR, XLR 3P, FEMALE
CN5	1-564-002-11	s	CONNECTOR 3P, MALE
FB1	1-412-694-11	s	INDUCTOR, BEED
FB2	1-412-694-11	s	INDUCTOR, BEED
FB11	1-412-694-11	s	INDUCTOR, BEED
FB12	1-412-694-11	s	INDUCTOR, BEED
FB13	1-412-694-11	s	INDUCTOR, BEED
FB14	1-412-694-11	s	INDUCTOR, BEED
FB15	1-412-694-11	s	INDUCTOR, BEED
FB16	1-412-694-11	s	INDUCTOR, BEED
FB21	1-412-694-11	s	INDUCTOR, BEED
FB22	1-412-694-11	s	INDUCTOR, BEED
FB23	1-412-694-11	s	INDUCTOR, BEED
FB24	1-412-694-11	s	INDUCTOR, BEED
FB25	1-412-694-11	s	INDUCTOR, BEED
FB26	1-412-694-11	s	INDUCTOR, BEED

CP-234 BOARD

Ref. No. or Q'ty	Part No.	SP	Description
1pc	1-650-077-11	o	PRINTED CIRCUIT BOARD, CP-234
C1	1-164-182-11	s	CERAMIC, CHIP 3300pF 10% 100V
C2	1-164-182-11	s	CERAMIC, CHIP 3300pF 10% 100V
CN1	1-506-469-11	s	CONNECTOR 4P, MALE
FB1	1-412-694-11	s	INDUCTOR, BEED
FB2	1-412-694-11	s	INDUCTOR, BEED
J1	1-562-999-41	s	JACK, PIN 2P

NOTE: Please see page 7-10 for the parts that are not listed in the parts list.

NOTE: For # marked in the parts list, refer to "SECTION 8 CHANGED PARTS".

HP-57 BOARD

Ref. No. or Q'ty	Part No.	SP	Description
1pc	1-650-075-11	o	PRINTED CIRCUIT BOARD, HP-57
1pc	3-678-376-01	o	BRACKET, JACK
1pc	7-682-903-01	s	SCREW +PWH 3X5
FB1	1-412-694-11	s	INDUCTOR, BEED
FB2	1-412-694-11	s	INDUCTOR, BEED
FB3	1-412-694-11	s	INDUCTOR, BEED
FB4	1-412-694-11	s	INDUCTOR, BEED
J1	1-569-190-11	s	JACK (LARGE TYPE)
RV1	1-241-331-11	s	RES, VAR CARBON 10K/10K

KY-247 BOARD

Ref. No. or Q'ty	Part No.	SP	Description
1pc	1-650-074-11	o	PRINTED CIRCUIT BOARD, KY-247
1pc	4-928-315-81	s	KEY TOP
S1	1-571-655-21	s	SWITCH, PUSH(WITH LED)

LED-160 BOARD

Ref. No. or Q'ty	Part No.	SP	Description
1pc	1-650-080-11	o	PRINTED CIRCUIT BOARD, LED-160
D1	8-719-041-51	s	LED GL1EG111, YELLOWISH GREEN

REEL FG BOARD

Ref. No. or Q'ty	Part No.	SP	Description
1pc	A-8276-769-A	o	MOUNTED CIRCUIT BOARD, REEL FG
(This assembly includes the following parts.)			
1pc	1-648-983-11	o	PRINTED CIRCUIT BOARD, REEL FG
C1	1-164-505-11	s	CERAMIC 2.2uF 16V

NOTE: Please see page 7-10 for the parts that are not listed in the parts list.

RF-53 BOARD

Ref. No. or Q'ty	Part No.	SP	Description
C102	1-164-845-11	s	CERAMIC 5PF 5% 16V
C103	1-164-004-11	s	CERAMIC, CHIP 0.1uF 10% 25V
C104	1-164-845-11	s	CERAMIC 5PF 5% 16V
C105	1-164-004-11	s	CERAMIC, CHIP 0.1uF 10% 25V
C107	1-164-874-11	s	CERAMIC 100PF 5% 16V
C108	1-164-874-11	s	CERAMIC 100PF 5% 16V
C111	1-164-004-11	s	CERAMIC, CHIP 0.1uF 10% 25V
C112	1-162-921-11	s	CERAMIC, CHIP 33PF 5% 50V
C113	1-164-004-11	s	CERAMIC, CHIP 0.1uF 10% 25V
C114	1-162-921-11	s	CERAMIC, CHIP 33PF 5% 50V
C115	1-164-004-11	s	CERAMIC, CHIP 0.1uF 10% 25V
C116	1-164-004-11	s	CERAMIC, CHIP 0.1uF 10% 25V
C117	1-164-937-11	s	CERAMIC 0.001uF 10% 16V
C118	1-164-937-11	s	CERAMIC 0.001uF 10% 16V
C119	1-164-874-11	s	CERAMIC 100PF 5% 16V
C120	1-164-874-11	s	CERAMIC 100PF 5% 16V
#C121	1-135-259-11	s	TANTALUM, CHIP 10uF 20% 6.3V
C122	1-164-004-11	s	CERAMIC, CHIP 0.1uF 10% 25V
C123	1-164-882-11	s	CERAMIC 220PF 5% 16V
C124	1-164-940-11	s	CERAMIC 0.0033uF 10% 16V
C125	1-164-882-11	s	CERAMIC 220PF 5% 16V
C126	1-164-004-11	s	CERAMIC, CHIP 0.1uF 10% 25V
C128	1-164-937-11	s	CERAMIC 0.001uF 10% 16V
C129	1-164-935-11	s	CERAMIC 470PF 10% 16V
C130	1-164-882-11	s	CERAMIC 220PF 5% 16V
C131	1-164-874-11	s	CERAMIC 100PF 5% 16V
C132	1-164-004-11	s	CERAMIC, CHIP 0.1uF 10% 25V
C134	1-162-968-11	s	CERAMIC, CHIP 0.0047uF 10% 50V
C136	1-164-004-11	s	CERAMIC, CHIP 0.1uF 10% 25V
C137	1-164-882-11	s	CERAMIC 220PF 5% 16V
C138	1-164-882-11	s	CERAMIC 220PF 5% 16V
C139	1-162-964-11	s	CERAMIC, CHIP 0.001uF 10% 50V
C202	1-164-845-11	s	CERAMIC 5PF 5% 16V
C203	1-164-004-11	s	CERAMIC, CHIP 0.1uF 10% 25V
C204	1-164-845-11	s	CERAMIC 5PF 5% 16V
C205	1-164-004-11	s	CERAMIC, CHIP 0.1uF 10% 25V
C207	1-164-874-11	s	CERAMIC 100PF 5% 16V
C208	1-164-874-11	s	CERAMIC 100PF 5% 16V
C211	1-164-004-11	s	CERAMIC, CHIP 0.1uF 10% 25V
C212	1-162-921-11	s	CERAMIC, CHIP 33PF 5% 50V
C213	1-164-004-11	s	CERAMIC, CHIP 0.1uF 10% 25V
C214	1-162-921-11	s	CERAMIC, CHIP 33PF 5% 50V
C215	1-164-004-11	s	CERAMIC, CHIP 0.1uF 10% 25V
C216	1-164-004-11	s	CERAMIC, CHIP 0.1uF 10% 25V
C217	1-164-937-11	s	CERAMIC 0.001uF 10% 16V
C218	1-164-937-11	s	CERAMIC 0.001uF 10% 16V
C219	1-164-874-11	s	CERAMIC 100PF 5% 16V
C220	1-164-874-11	s	CERAMIC 100PF 5% 16V
#C221	1-135-259-11	s	TANTALUM, CHIP 10uF 20% 6.3V
C222	1-164-004-11	s	CERAMIC, CHIP 0.1uF 10% 25V
C223	1-164-882-11	s	CERAMIC 220PF 5% 16V
C224	1-164-940-11	s	CERAMIC 0.0033uF 10% 16V
C225	1-164-882-11	s	CERAMIC 220PF 5% 16V
C226	1-164-004-11	s	CERAMIC, CHIP 0.1uF 10% 25V
C228	1-164-937-11	s	CERAMIC 0.001uF 10% 16V
C229	1-164-935-11	s	CERAMIC 470PF 10% 16V
C230	1-164-882-11	s	CERAMIC 220PF 5% 16V
C231	1-164-874-11	s	CERAMIC 100PF 5% 16V
C232	1-164-004-11	s	CERAMIC, CHIP 0.1uF 10% 25V

NOTE: For # marked in the parts list, refer to "SECTION 8 CHANGED PARTS".

(RF-53 BOARD)

Ref. No. or Q'ty	Part No.	SP	Description
C234	1-162-968-11	s	CERAMIC, CHIP 0.0047uF 10% 50V
C236	1-164-004-11	s	CERAMIC, CHIP 0.1uF 10% 25V
C237	1-164-882-11	s	CERAMIC 220PF 5% 16V
C238	1-164-882-11	s	CERAMIC 220PF 5% 16V
C239	1-162-964-11	s	CERAMIC, CHIP 0.001uF 10% 50V
C301	1-164-004-11	s	CERAMIC, CHIP 0.1uF 10% 25V
C303	1-164-004-11	s	CERAMIC, CHIP 0.1uF 10% 25V
C304	1-164-004-11	s	CERAMIC, CHIP 0.1uF 10% 25V
C307	1-164-004-11	s	CERAMIC, CHIP 0.1uF 10% 25V
CN1	1-566-531-11	s	CONNECTOR, FPC (ZIF) 15P
CN2	1-565-882-11	o	CONNECTOR, 10P, MALE
CN3	1-566-534-11	s	CONNECTOR, FPC (ZIF) 18P
IC101	8-752-039-01	s	IC CXA1364R
IC201	8-752-039-01	s	IC CXA1364R
IC301	8-759-064-36	s	IC MB88346BPFV
L101	1-410-381-11	s	INDUCTOR CHIP 10UH
L201	1-410-381-11	s	INDUCTOR CHIP 10UH
L301	1-410-381-11	s	INDUCTOR CHIP 10UH
Q101	8-729-102-08	s	TRANSISTOR 2SC2223-T1F14
Q102	8-729-102-08	s	TRANSISTOR 2SC2223-T1F14
Q103	8-729-901-00	s	TRANSISTOR DTC124EK
Q104	8-729-230-49	s	TRANSISTOR 2SC2712-YG
Q105	8-729-230-49	s	TRANSISTOR 2SC2712-YG
Q106	8-729-216-21	s	TRANSISTOR 2SA1162-Y
Q107	8-729-230-49	s	TRANSISTOR 2SC2712-YG
Q108	8-729-216-21	s	TRANSISTOR 2SA1162-Y
Q109	8-729-230-49	s	TRANSISTOR 2SC2712-YG
Q110	8-729-230-49	s	TRANSISTOR 2SC2712-YG
Q201	8-729-102-08	s	TRANSISTOR 2SC2223-T1F14
Q202	8-729-102-08	s	TRANSISTOR 2SC2223-T1F14
Q203	8-729-901-00	s	TRANSISTOR DTC124EK
Q204	8-729-230-49	s	TRANSISTOR 2SC2712-YG
Q205	8-729-230-49	s	TRANSISTOR 2SC2712-YG
Q206	8-729-216-21	s	TRANSISTOR 2SA1162-Y
Q207	8-729-230-49	s	TRANSISTOR 2SC2712-YG
Q208	8-729-216-21	s	TRANSISTOR 2SA1162-Y
Q209	8-729-230-49	s	TRANSISTOR 2SC2712-YG
Q210	8-729-230-49	s	TRANSISTOR 2SC2712-YG
R101	1-216-837-11	s	METAL, CHIP 22K 5% 1/16W
R102	1-216-797-11	s	METAL, CHIP 10 5% 1/16W
R103	1-216-797-11	s	METAL, CHIP 10 5% 1/16W
R104	1-216-837-11	s	METAL, CHIP 22K 5% 1/16W
R105	1-216-833-11	s	METAL, CHIP 10K 5% 1/16W
R106	1-216-812-11	s	METAL, CHIP 180 5% 1/16W
R107	1-216-812-11	s	METAL, CHIP 180 5% 1/16W
R108	1-216-833-11	s	METAL, CHIP 10K 5% 1/16W
R109	1-216-834-11	s	METAL, CHIP 12K 5% 1/16W
R110	1-218-973-11	s	METAL 27K 5% 1/16W
R111	1-218-967-11	s	METAL 15K 5% 1/16W
R112	1-218-967-11	s	METAL 15K 5% 1/16W
R113	1-218-990-11	s	METAL 0 5% 1/16W
R114	1-218-973-11	s	METAL 47K 5% 1/16W
R115	1-218-990-11	s	METAL 0 5% 1/16W
R116	1-218-967-11	s	METAL 15K 5% 1/16W
R117	1-218-967-11	s	METAL 15K 5% 1/16W
R118	1-218-952-11	s	METAL 820 5% 1/16W
R119	1-218-961-11	s	METAL 4.7K 5% 1/16W
R120	1-220-184-81	s	METAL 1.3K 5% 16W

NOTE: Please see page 7-10 for the parts that are not listed in the parts list.

(RF-53 BOARD)

Ref. No. or Q'ty	Part No.	SP	Description
R121	1-218-961-11	s	METAL 4.7K 5% 1/16W
R122	1-218-968-11	s	METAL 18K 5% 1/16W
R123	1-218-968-11	s	METAL 18K 5% 1/16W
R124	1-220-193-81	s	METAL 7.5K 5% 16W
R125	1-220-193-81	s	METAL 7.5K 5% 16W
R126	1-218-968-11	s	METAL 18K 5% 1/16W
R127	1-220-193-81	s	METAL 7.5K 5% 16W
R128	1-216-835-11	s	METAL, CHIP 15K 5% 1/16W
R129	1-216-833-11	s	METAL, CHIP 10K 5% 1/16W
R130	1-216-809-11	s	METAL, CHIP 100 5% 1/16W
R131	1-216-821-11	s	METAL, CHIP 1K 5% 1/16W
R132	1-216-821-11	s	METAL, CHIP 1K 5% 1/16W
R133	1-216-830-11	s	METAL, CHIP 5.6K 5% 1/16W
R134	1-216-830-11	s	METAL, CHIP 5.6K 5% 1/16W
R135	1-216-791-11	s	METAL, CHIP 3.3 5% 1/16W
R136	1-216-791-11	s	METAL, CHIP 3.3 5% 1/16W
R137	1-216-827-11	s	METAL, CHIP 3.3K 5% 1/16W
R138	1-216-827-11	s	METAL, CHIP 3.3K 5% 1/16W
R139	1-216-827-11	s	METAL, CHIP 3.3K 5% 1/16W
R140	1-216-821-11	s	METAL, CHIP 1K 5% 1/16W
R201	1-216-837-11	s	METAL, CHIP 22K 5% 1/16W
R202	1-216-797-11	s	METAL, CHIP 10 5% 1/16W
R203	1-216-797-11	s	METAL, CHIP 10 5% 1/16W
R204	1-216-837-11	s	METAL, CHIP 22K 5% 1/16W
R205	1-216-833-11	s	METAL, CHIP 10K 5% 1/16W
R206	1-216-812-11	s	METAL, CHIP 180 5% 1/16W
R207	1-216-812-11	s	METAL, CHIP 180 5% 1/16W
R208	1-216-833-11	s	METAL, CHIP 10K 5% 1/16W
R209	1-216-834-11	s	METAL, CHIP 12K 5% 1/16W
R210	1-218-973-11	s	METAL 47K 5% 1/16W
R211	1-218-967-11	s	METAL 15K 5% 1/16W
R212	1-218-967-11	s	METAL 15K 5% 1/16W
R213	1-218-990-11	s	METAL 0 5% 1/16W
R214	1-218-973-11	s	METAL 47K 5% 1/16W
R215	1-218-990-11	s	METAL 0 5% 1/16W
R216	1-218-967-11	s	METAL 15K 5% 1/16W
R217	1-218-967-11	s	METAL 15K 5% 1/16W
R218	1-218-952-11	s	METAL 820 5% 1/16W
R219	1-218-961-11	s	METAL 4.7K 5% 1/16W
R220	1-220-184-81	s	METAL 1.3K 5% 16W
R221	1-218-961-11	s	METAL 4.7K 5% 1/16W
R222	1-218-968-11	s	METAL 18K 5% 1/16W
R223	1-218-968-11	s	METAL 18K 5% 1/16W
R224	1-220-193-81	s	METAL 7.5K 5% 16W
R225	1-220-193-81	s	METAL 7.5K 5% 16W
R226	1-218-968-11	s	METAL 18K 5% 1/16W
R227	1-220-193-81	s	METAL 7.5K 5% 16W
R228	1-216-835-11	s	METAL, CHIP 15K 5% 1/16W
R229	1-216-833-11	s	METAL, CHIP 10K 5% 1/16W
R230	1-216-809-11	s	METAL, CHIP 100 5% 1/16W
R231	1-216-821-11	s	METAL, CHIP 1K 5% 1/16W
R232	1-216-821-11	s	METAL, CHIP 1K 5% 1/16W
R233	1-216-830-11	s	METAL, CHIP 5.6K 5% 1/16W
R234	1-216-830-11	s	METAL, CHIP 5.6K 5% 1/16W
R235	1-216-791-11	s	METAL, CHIP 3.3 5% 1/16W
R236	1-216-791-11	s	METAL, CHIP 3.3 5% 1/16W
R237	1-216-827-11	s	METAL, CHIP 3.3K 5% 1/16W
R238	1-216-827-11	s	METAL, CHIP 3.3K 5% 1/16W
R239	1-216-827-11	s	METAL, CHIP 3.3K 5% 1/16W

NOTE: For # marked in the parts list, refer to "SECTION 8 CHANGED PARTS".

(RF-53 BOARD)

Ref. No. or Q'ty	Part No.	SP	Description
R240	1-216-821-11	s	METAL, CHIP 1K 5% 1/16W
R301	1-216-841-11	s	METAL, CHIP 47K 5% 1/16W
R302	1-216-841-11	s	METAL, CHIP 47K 5% 1/16W
R303	1-216-841-11	s	METAL, CHIP 47K 5% 1/16W

NOTE: Please see page 7-10 for the parts that are not listed in the parts list.

SSP-8 BOARD

Ref. No. or Q'ty	Part No.	SP	Description
1pc	A-8275-316-A	o	MOUNTED CIRCUIT BOARD, SSP-8
(This assembly includes the following parts.)			
1pc	1-563-180-11	o	HOUSING, 6P
3pcs	4-924-029-11	s	WASHER
BT101	1-528-229-11	o	BATTERY, LITHIUM CR-2450
BZ101	1-529-025-00	s	BUZZER
C102	1-136-165-00	s	FILM 0.1uF 5% 50V
C104	1-126-157-11	s	ELECT 10uF 20% 16V
C113	1-128-057-11	s	ELECT 330uF 20% 6.3V
C118	1-125-447-11	s	DOUBLE LAYERS 1FARAD 5.5V
C119	1-125-447-11	s	DOUBLE LAYERS 1FARAD 5.5V
C136	1-126-160-11	s	ELECT 1uF 20% 50V
C137	1-126-160-11	s	ELECT 1uF 20% 50V
C139	1-126-160-11	s	ELECT 1uF 20% 50V
C140	1-126-160-11	s	ELECT 1uF 20% 50V
C156	1-126-157-11	s	ELECT 10uF 20% 16V
C162	1-128-057-11	s	ELECT 330uF 20% 6.3V
C164	1-126-940-11	s	ELECT 330uF 20% 16V
#C175	1-163-133-00	s	CERAMIC, CHIP 470pF 5% 50V
#C176	1-163-133-00	s	CERAMIC, CHIP 470pF 5% 50V
#C177	1-163-133-00	s	CERAMIC, CHIP 470pF 5% 50V
#C178	1-163-133-00	s	CERAMIC, CHIP 470pF 5% 50V
#C179	1-163-133-00	s	CERAMIC, CHIP 470pF 5% 50V
#C180	1-163-133-00	s	CERAMIC, CHIP 470pF 5% 50V
#C181	1-163-133-00	s	CERAMIC, CHIP 470pF 5% 50V
#C182	1-163-133-00	s	CERAMIC, CHIP 470pF 5% 50V
#C183	1-163-133-00	s	CERAMIC, CHIP 470pF 5% 50V
#C184	1-163-133-00	s	CERAMIC, CHIP 470pF 5% 50V
#C185	1-163-133-00	s	CERAMIC, CHIP 470pF 5% 50V
C305	1-128-057-11	s	ELECT 330uF 20% 6.3V
C323	1-128-057-11	s	ELECT 330uF 20% 6.3V
C505	1-128-057-11	s	ELECT 330uF 20% 6.3V
C526	1-128-057-11	s	ELECT 330uF 20% 6.3V
C701	1-126-160-11	s	ELECT 1uF 20% 50V
C702	1-128-057-11	s	ELECT 330uF 20% 6.3V
C703	1-126-940-11	s	ELECT 330uF 20% 16V
C704	1-126-940-11	s	ELECT 330uF 20% 16V
C705	1-128-057-11	s	ELECT 330uF 20% 6.3V
C706	1-126-157-11	s	ELECT 10uF 20% 16V
C707	1-126-160-11	s	ELECT 1uF 20% 50V
C708	1-136-169-00	s	MYLAR 0.22uF 5% 50V
C709	1-136-169-00	s	MYLAR 0.22uF 5% 50V
C713	1-136-177-00	s	FILM 1uF 5% 50V
C714	1-126-157-11	s	ELECT 10uF 20% 16V
C715	1-164-346-11	s	CERAMIC 1uF 16V
C721	1-128-057-11	s	ELECT 330uF 20% 6.3V
C724	1-128-057-11	s	ELECT 330uF 20% 6.3V
C728	1-128-057-11	s	ELECT 330uF 20% 6.3V
#C729	1-163-038-00	s	CERAMIC, CHIP 0.1uF 25V
C733	1-128-057-11	s	ELECT 330uF 20% 6.3V
C736	1-128-057-11	s	ELECT 330uF 20% 6.3V
C738	1-128-057-11	s	ELECT 330uF 20% 6.3V
C742	1-128-057-11	s	ELECT 330uF 20% 6.3V
C746	1-128-057-11	s	ELECT 330uF 20% 6.3V
C751	1-128-057-11	s	ELECT 330uF 20% 6.3V
#C765	1-163-038-00	s	CERAMIC, CHIP 0.1uF 25V

NOTE: For # marked in the parts list, refer to "SECTION 8 CHANGED PARTS".

(SSP-8 BOARD)

Ref. No. or Q'ty	Part No.	SP	Description
C766	1-128-057-11	s	ELECT 330uF 20% 6.3V
#C767	1-163-038-00	s	CERAMIC, CHIP 0.1uF 25V
#C768	1-163-038-00	s	CERAMIC, CHIP 0.1uF 25V
#C769	1-163-038-00	s	CERAMIC, CHIP 0.1uF 25V
#C770	1-163-038-00	s	CERAMIC, CHIP 0.1uF 25V
#C771	1-163-038-00	s	CERAMIC, CHIP 0.1uF 25V
#C772	1-128-057-11	s	ELECT 330uF 20% 6.3V
#C773	1-163-038-00	s	CERAMIC, CHIP 0.1uF 25V
#C774	1-163-038-00	s	CERAMIC, CHIP 0.1uF 25V
#C775	1-163-038-00	s	CERAMIC, CHIP 0.1uF 25V
#C776	1-163-038-00	s	CERAMIC, CHIP 0.1uF 25V
#C777	1-163-038-00	s	CERAMIC, CHIP 0.1uF 25V
#C778	1-163-038-00	s	CERAMIC, CHIP 0.1uF 25V
C902	1-128-057-11	s	ELECT 330uF 20% 6.3V
C904	1-128-057-11	s	ELECT 330uF 20% 6.3V
C908	1-128-057-11	s	ELECT 330uF 20% 6.3V
C910	1-128-057-11	s	ELECT 330uF 20% 6.3V
C912	1-128-057-11	s	ELECT 330uF 20% 6.3V
C914	1-128-057-11	s	ELECT 330uF 20% 6.3V
C916	1-128-057-11	s	ELECT 330uF 20% 6.3V
C918	1-128-057-11	s	ELECT 330uF 20% 6.3V
C922	1-128-057-11	s	ELECT 330uF 20% 6.3V
C924	1-128-057-11	s	ELECT 330uF 20% 6.3V
C926	1-128-057-11	s	ELECT 330uF 20% 6.3V
C928	1-128-057-11	s	ELECT 330uF 20% 6.3V
#C935	1-163-038-00	s	CERAMIC, CHIP 0.1uF 25V
CN102	1-506-472-11	s	CONNECTOR 7P, MALE
CN103	1-506-683-11	s	CONNECTOR, PS 16P, MALE
CN104	1-564-001-11	o	CONNECTOR 2P, MALE
CN302	1-506-480-11	s	CONNECTOR 15P, MALE
CN701	1-508-797-00	o	PIN, CONNECTOR 4P
CN702	1-508-797-00	o	PIN, CONNECTOR 4P
CN703	1-508-797-00	o	PIN, CONNECTOR 4P
CN706	1-506-468-11	s	CONNECTOR 3P, MALE
CN709	1-506-474-11	s	CONNECTOR 9P, MALE
CN712	1-506-480-11	s	CONNECTOR 15P, MALE
CNI103	1-540-080-11	s	SOCKET, IC (IC113) 68P
#CNI112	1-526-662-21	o	SOCKET, IC 40P
CNI301	1-540-080-11	s	SOCKET, IC (IC113) 68P
#CNI307	1-526-662-21	o	SOCKET, IC 40P
CNI501	1-540-080-11	s	SOCKET, IC (IC113) 68P
#CNI509	1-526-662-21	o	SOCKET, IC 40P
CP101	1-577-171-11	s	CRYSTAL 16.00MHz
CP102	1-415-502-11	s	DELAY LINE 100nS
CP701	1-760-149-21	s	CRYSTAL 49.1520MHz
CP702	1-760-148-21	s	CRYSTAL 37.6320MHz
D101	8-719-028-74	s	DIODE NSQ03A04
D102	8-719-028-74	s	DIODE NSQ03A04
D103	8-719-028-74	s	DIODE NSQ03A04
D104	8-719-028-74	s	DIODE NSQ03A04
D105	8-719-028-74	s	DIODE NSQ03A04
D106	8-719-989-22	s	LED CL-150R-CD, RED
D107	8-719-989-22	s	LED CL-150R-CD, RED
D108	8-719-987-41	s	LED CL-150Y-CD, AMBER
D109	8-719-987-43	s	LED CL-150PG-CD, GRN
D701	8-719-911-19	s	DIODE 1SS119
D702	8-719-911-19	s	DIODE 1SS119

NOTE: Please see page 7-10 for the parts that are not listed in the parts list.

(SSP-8 BOARD)

Ref. No. or Q'ty	Part No.	SP	Description
D703	8-719-911-19	s	DIODE 1SS119
D704	8-719-911-19	s	DIODE 1SS119
#D705	8-719-941-84	s	DIODE DA204UT106
#D706	8-719-911-19	s	DIODE 1SS119
FB701	1-412-694-11	s	INDUCTOR BEAD
#FB702	1-412-694-11	s	INDUCTOR BEAD
IC101	8-759-925-74	s	IC TC74HC04NS
IC102	8-759-973-71	s	IC TL7705CPS-B
IC103	8-759-151-34	s	IC UPD70216L-10
IC104	8-759-170-54	s	IC CXD8830Q
IC105	8-759-929-77	s	IC SN74LS03NS
IC106	8-752-338-23	s	IC CXK581100TM-10LL
IC107	8-752-338-23	s	IC CXK581100TM-10LL
IC108	8-759-171-48	s	IC CXD8326Q
IC109	8-759-927-46	s	IC SN74HC00NS
IC110	8-759-973-43	s	IC MB8421-90LPFQ
IC111	8-759-510-88	s	IC MB8431-90LPFQ
IC112	8-759-266-56	o	IC 27C240-I112V1.01
IC114	8-759-926-06	s	IC SN74HC126NS
IC115	8-759-174-34	s	IC ST93CS56M1013TR
IC116	8-759-164-72	s	IC UPD71101GD-10-5BB
IC117	8-759-922-44	s	IC MSM5832RS
IC118	8-759-925-76	s	IC SN74HC08NS
IC119	8-759-925-90	s	IC SN74HC74NS
IC120	8-759-925-80	s	IC SN74HC14NS
IC121	8-759-166-98	s	IC LT1134CS-E1
IC122	8-759-926-82	s	IC SN74HC574ANS
IC123	8-759-926-82	s	IC SN74HC574ANS
IC124	8-759-925-85	s	IC SN74HC32NS
IC125	8-759-171-49	s	IC UPD72020GC-8-3B6
IC126	8-759-939-28	s	IC CXD1102Q
IC127	8-752-337-91	s	IC CXK58257ATM-70LL
IC128	8-752-337-91	s	IC CXK58257ATM-70LL
IC129	8-759-251-49	o	IC PALCE16V8Q-25JC-VIF
IC131	8-759-149-10	s	IC UPD4702G
IC132	8-759-948-58	s	IC 74F244SJ
IC133	8-759-500-05	s	IC MSM6338MS-K
IC134	8-759-926-77	s	IC SN74HC541NS
IC135	8-759-149-10	s	IC UPD4702G
IC136	8-759-149-10	s	IC UPD4702G
IC301	8-759-151-34	s	IC UPD70216L-10
IC302	8-759-170-54	s	IC CXD8830Q
IC303	8-759-926-12	s	IC SN74HC139NS
IC304	8-759-925-74	s	IC TC74HC04NS
IC305	8-752-337-91	s	IC CXK58257ATM-70LL
IC306	8-752-337-91	s	IC CXK58257ATM-70LL
IC307	8-759-254-70	s	IC 27C240-P307V1.00
IC308	8-759-925-72	s	IC SN74HC02NS
IC309	8-759-926-06	s	IC SN74HC126NS
IC310	8-759-149-09	s	IC UPD71059GB-10-3B4
IC311	8-759-149-07	s	IC UPD71054GB-10-3B4
IC312	8-759-925-85	s	IC SN74HC32NS
IC313	8-759-154-60	s	IC UPD71055GB-10-3B4
IC314	8-759-926-82	s	IC SN74HC574ANS
IC316	8-759-051-53	s	IC TD62381F
IC317	8-759-170-56	s	IC CXD8828Q
IC318	8-759-926-52	s	IC SN74HC257NS
IC319	8-759-925-90	s	IC SN74HC74NS

NOTE: For # marked in the parts list, refer to "SECTION 8 CHANGED PARTS".

(SSP-8 BOARD)

Ref. No. or Q'ty	Part No.	SP	Description
IC501	8-759-151-34	s	IC UPD70216L-10
IC502	8-759-170-54	s	IC CXD8830Q
IC503	8-759-925-82	s	IC SN74HC21NS
IC504	8-759-925-74	s	IC TC74HC04NS
IC505	8-759-973-43	s	IC MB8421-90LPFQ
IC506	8-759-510-88	s	IC MB8431-90LPFQ
IC507	8-752-337-91	s	IC CXK58257ATM-70LL
IC508	8-752-337-91	s	IC CXK58257ATM-70LL
IC509	8-759-254-68	s	IC 27C210A-R509V1.00
IC510	8-759-925-72	s	IC SN74HC02NS
IC511	8-759-926-06	s	IC SN74HC126NS
IC512	8-759-149-09	s	IC UPD71059GB-10-3B4
IC513	8-759-925-85	s	IC SN74HC32NS
IC514	8-759-149-07	s	IC UPD71054GB-10-3B4
IC515	8-759-926-82	s	IC SN74HC574ANS
IC517	8-759-170-56	s	IC CXD8828Q
IC701	8-759-708-05	s	IC NJM78L05A
IC702	8-752-306-51	s	IC CX23065A
IC703	8-759-923-65	s	IC AM26LS31CNS
IC704	8-759-923-64	s	IC AM26LS32ACNS
IC705	8-759-925-74	s	IC TC74HC04NS
IC706	8-759-931-43	s	IC SN74LS624NS
IC707	8-752-337-91	s	IC CXK58257ATM-70LL
IC708	8-752-352-24	s	IC CXD2605R
IC709	8-759-243-19	s	IC TC7SU04F
#IC710	8-759-926-77	s	IC SN74HC541NS
IC711	8-752-337-91	s	IC CXK58257ATM-70LL
IC712	8-752-352-24	s	IC CXD2605R
IC713	8-759-243-19	s	IC TC7SU04F
IC714	8-752-337-91	s	IC CXK58257ATM-70LL
IC715	8-752-352-24	s	IC CXD2605R
IC716	8-759-243-19	s	IC TC7SU04F
IC717	8-759-925-76	s	IC SN74HC08NS
IC718	8-759-925-74	s	IC TC74HC04NS
IC719	8-759-170-55	s	IC CXD8829Q
IC720	8-759-925-90	s	IC SN74HC74NS
IC721	8-759-925-90	s	IC SN74HC74NS
IC722	8-759-925-90	s	IC SN74HC74NS
IC723	8-759-926-24	s	IC SN74HC164NS
IC724	8-759-926-24	s	IC SN74HC164NS
IC725	8-759-926-24	s	IC SN74HC164NS
IC726	8-759-926-24	s	IC SN74HC164NS
IC727	8-759-926-24	s	IC SN74HC164NS
IC728	8-759-926-26	s	IC SN74HC166NS
IC729	8-759-926-26	s	IC SN74HC166NS
IC730	8-759-926-26	s	IC SN74HC166NS
IC731	8-759-926-26	s	IC SN74HC166NS
#IC733	8-759-038-46	s	IC SC7S00F
#IC735	8-759-925-90	s	IC SN74HC74ANS
#IC736	8-759-927-46	s	IC SN74HC00ANS
#IC737	8-759-925-90	s	IC SN74HC74ANS
#IC738	8-759-927-46	s	IC SN74HC00ANS
#IC739	8-759-927-46	s	IC SN74HC00ANS
#IC740	8-759-925-76	s	IC SN74HC08ANS
IC901	8-759-254-77	s	IC CXD8864Q
IC902	8-759-043:71	s	IC TMS44400-80SD
IC903	8-759-043-71	s	IC TMS44400-80SD
IC904	8-759-043-71	s	IC TMS44400-80SD
IC905	8-759-043-71	s	IC TMS44400-80SD

NOTE: Please see page 7-10 for the parts that are not listed in the parts list.

(SSP-8 BOARD)

Ref. No. or Q'ty	Part No.	SP	Description
IC906	8-759-254-77	s	IC CXD8864Q
IC907	8-759-043-71	s	IC TMS44400-80SD
IC908	8-759-043-71	s	IC TMS44400-80SD
IC909	8-759-043-71	s	IC TMS44400-80SD
IC910	8-759-043-71	s	IC TMS44400-80SD
IC911	8-752-343-18	s	IC CXD2704Q
IC912	8-752-343-18	s	IC CXD2704Q
IC913	8-752-343-18	s	IC CXD2704Q
#IC914	8-759-279-59	s	IC EPM7032-WECTL
L701	1-410-482-31	s	INDUCTOR 100uH
L702	1-410-482-31	s	INDUCTOR 100uH
L703	1-410-482-31	s	INDUCTOR 100uH
L704	1-410-482-31	s	INDUCTOR 100uH
L705	1-412-533-21	s	INDUCTOR 47uH
#L706	1-412-533-21	s	INDUCTOR 47uH
ND301	8-719-951-37	s	LED LA-301VB, RED
ND501	8-719-951-37	s	LED LA-301VB, RED
#R713	1-216-025-00	s	METAL, CHIP 100 5% 1/10W
#R718	1-216-025-00	s	METAL, CHIP 100 5% 1/10W
#R725	1-216-025-00	s	METAL, CHIP 100 5% 1/10W
S102	1-692-535-11	s	SWITCH, DI7P 8-CKT
T701	1-437-194-21	s	TRANSFORMER, PULSE
X101	1-567-862-11	s	CRYSTAL, 4.9152MHZ
X102	1-577-110-11	s	CRYSTAL 20MHz
X103	1-567-098-00	s	CRYSTAL 32.76800MHz
X301	1-577-110-11	s	CRYSTAL 20MHz
X501	1-577-110-11	s	CRYSTAL 20MHz
X701	1-567-815-11	s	CRYSTAL 22.5792MHz¥

[DUS-746 BOARD]
Up to Serial No. J:10110, UC:20055, EK:50235

C1	1-163-038-00	s	CERAMIC, CHIP 0.1uF 25V
IC1	8-759-279-59	s	IC EPM7032-WECTL
R1	1-216-029-00	s	METAL, CHIP 150 5% 1/10W
R2	1-216-029-00	s	METAL, CHIP 150 5% 1/10W

[DUS-757 BOARD]
Up to Serial No. J:10110, UC:20055, EK:50235

IC1	8-759-925-90	s	IC SN74HC74ANS
IC2	8-759-927-46	s	IC SN74HC00ANS

NOTE: For # marked in the parts list, refer to "SECTION 8 CHANGED PARTS".

SV-147 BOARD

Ref. No. or Q'ty	Part No.	SP	Description
1pc	A-8310-133-A	o	MOUNTED CIRCUIT BOARD, SV-147
(This assembly includes the following parts.)			
4pcs	3-374-740-01	s	BRACKET, LED
C1	1-164-489-11	s	CERAMIC, CHIP 0.22uF 10% 16V
C5	1-162-969-11	s	CERAMIC, CHIP 0.0068uF 10% 25V
C7	1-162-970-11	s	CERAMIC, CHIP 0.01uF 10% 25V
C8	1-164-227-11	s	CERAMIC, CHIP 0.022uF 10% 25V
C9	1-162-970-11	s	CERAMIC, CHIP 0.01uF 10% 25V
C10	1-162-965-11	s	CERAMIC, CHIP 0.0015uF 10% 50V
C11	1-164-156-11	s	CERAMIC, CHIP 0.1uF 25V
C13	1-164-156-11	s	CERAMIC, CHIP 0.1uF 25V
C14	1-164-156-11	s	CERAMIC, CHIP 0.1uF 25V
C15	1-164-156-11	s	CERAMIC, CHIP 0.1uF 25V
C20	1-164-156-11	s	CERAMIC, CHIP 0.1uF 25V
C21	1-164-156-11	s	CERAMIC, CHIP 0.1uF 25V
C22	1-162-965-11	s	CERAMIC, CHIP 0.0015uF 10% 50V
C23	1-162-965-11	s	CERAMIC, CHIP 0.0015uF 10% 50V
C24	1-164-227-11	s	CERAMIC, CHIP 0.022uF 10% 25V
C25	1-164-227-11	s	CERAMIC, CHIP 0.022uF 10% 25V
C26	1-164-156-11	s	CERAMIC, CHIP 0.1uF 25V
C27	1-162-970-11	s	CERAMIC, CHIP 0.01uF 10% 25V
C28	1-164-156-11	s	CERAMIC, CHIP 0.1uF 25V
C29	1-162-970-11	s	CERAMIC, CHIP 0.01uF 10% 25V
C30	1-162-916-11	s	CERAMIC, CHIP 12PF 5% 50V
C31	1-162-916-11	s	CERAMIC, CHIP 12PF 5% 50V
C32	1-162-970-11	s	CERAMIC, CHIP 0.01uF 10% 25V
C33	1-162-964-11	s	CERAMIC, CHIP 0.001uF 10% 50V
C34	1-162-966-11	s	CERAMIC, CHIP 0.0022uF 10% 50V
C35	1-164-227-11	s	CERAMIC, CHIP 0.022uF 10% 25V
C36	1-164-156-11	s	CERAMIC, CHIP 0.1uF 25V
C38	1-164-156-11	s	CERAMIC, CHIP 0.1uF 25V
C39	1-164-156-11	s	CERAMIC, CHIP 0.1uF 25V
C40	1-128-397-21	s	ELECT 100uF 20% 16V
C41	1-164-156-11	s	CERAMIC, CHIP 0.1uF 25V
C42	1-164-156-11	s	CERAMIC, CHIP 0.1uF 25V
C43	1-128-397-21	s	ELECT 100uF 20% 16V
C44	1-164-156-11	s	CERAMIC, CHIP 0.1uF 25V
C45	1-164-156-11	s	CERAMIC, CHIP 0.1uF 25V
C47	1-164-156-11	s	CERAMIC, CHIP 0.1uF 25V
C48	1-164-156-11	s	CERAMIC, CHIP 0.1uF 25V
C49	1-164-156-11	s	CERAMIC, CHIP 0.1uF 25V
C52	1-164-156-11	s	CERAMIC, CHIP 0.1uF 25V
C53	1-164-156-11	s	CERAMIC, CHIP 0.1uF 25V
C54	1-128-397-21	s	ELECT 100uF 20% 16V
C55	1-128-397-21	s	ELECT 100uF 20% 16V
C56	1-164-156-11	s	CERAMIC, CHIP 0.1uF 25V
C57	1-164-156-11	s	CERAMIC, CHIP 0.1uF 25V
C58	1-164-156-11	s	CERAMIC, CHIP 0.1uF 25V
C59	1-164-156-11	s	CERAMIC, CHIP 0.1uF 25V
C60	1-164-156-11	s	CERAMIC, CHIP 0.1uF 25V
C61	1-164-156-11	s	CERAMIC, CHIP 0.1uF 25V
C62	1-164-156-11	s	CERAMIC, CHIP 0.1uF 25V
C63	1-164-156-11	s	CERAMIC, CHIP 0.1uF 25V
#C64	1-162-968-11	s	CERAMIC, CHIP 0.0047uF 10% 50V
#C65	1-135-259-11	s	TANTALUM, CHIP 10 20% 6.3V
CN1	1-691-419-11	o	HOUSING, 8P
CN2	1-566-532-11	s	CONNECTOR, FPC 16P

NOTE: Please see page 7-10 for the parts that are not listed in the parts list.

(SV-147 BOARD)

Ref. No. or Q'ty	Part No.	SP	Description
CN3	1-566-195-11	o	CONNECTOR, PIN 2P, MALE
CN4	1-566-526-11	s	CONNECTOR, 10P
CN5	1-566-524-11	s	CONNECTOR, FPC (ZIF) 8P
CN6	1-569-529-11	o	HOUSING, 14P
CN7	1-506-479-11	s	CONNECTOR 14P, MALE
CN8	1-566-534-11	s	CONNECTOR, FPC (ZIF) 18P
CN10	1-566-526-11	s	CONNECTOR, 10P
CN11	1-506-485-11	s	CONNECTOR 6P, MALE
D1	8-719-016-38	s	LED LN1351C6, GRN
D2	8-719-016-38	s	LED LN1351C6, GRN
D3	8-719-016-38	s	LED LN1351C6, GRN
D4	8-719-980-38	s	DIODE SB07-03C
D5	8-719-980-38	s	DIODE SB07-03C
D6	8-719-037-59	s	LED LN210RP, RED
D7	8-719-037-60	s	LED LN410YP, YEL
D8	8-719-018-39	s	LED LN310GP, GRN
D9	8-719-037-60	s	LED LN410YP, YEL
D10	8-719-400-18	s	DIODE MA152WK
D11	8-719-400-18	s	DIODE MA152WK
D12	8-719-400-18	s	DIODE MA152WK
D13	8-719-400-18	s	DIODE MA152WK
D14	8-719-980-38	s	DIODE SB07-03C
D15	8-719-980-38	s	DIODE SB07-03C
D16	8-719-400-18	s	DIODE MA152WK
IC1	8-759-929-26	s	IC TL431CPS
IC2	8-752-039-31	s	IC CXA1418N
IC3	8-752-038-71	s	IC CXA1127AM
#IC4	8-759-251-48	s	IC UPC358GR-E1
IC5	8-759-925-90	s	IC SN74HC74NS
IC6	8-759-925-90	s	IC SN74HC74NS
IC7	8-759-927-29	s	IC SN74HCU04NS
IC8	8-759-926-77	s	IC SN74HC541NS
IC9	8-752-854-07	s	IC CXP87532-008Q
IC10	8-759-998-49	s	IC MB3771PF
IC11	8-759-245-52	s	IC TA7291F
IC12	8-759-551-68	s	IC M6M80021FP
IC13	8-759-300-71	s	IC HD14053BFP
IC14	8-759-926-06	s	IC SN74HC126NS
IC15	8-759-823-87	s	IC LB1638M
#IC16	8-759-251-48	s	IC UPC358GR-E1
IC17	8-759-150-61	s	IC UPC78L05T
IC18	8-759-150-61	s	IC UPC78L05T
L1	1-410-381-11	s	INDUCTOR CHIP 10UH
L2	1-410-381-11	s	INDUCTOR CHIP 10UH
Q1	8-729-230-49	s	TRANSISTOR 2SC2712-YG
Q2	8-729-140-75	s	TRANSISTOR 2SD999
Q3	8-729-901-00	s	TRANSISTOR DTC124EK
Q4	8-729-901-00	s	TRANSISTOR DTC124EK
Q5	8-729-140-75	s	TRANSISTOR 2SD999
Q6	8-729-140-75	s	TRANSISTOR 2SD999
Q7	8-729-901-00	s	TRANSISTOR DTC124EK
Q8	8-729-901-00	s	TRANSISTOR DTC124EK
Q9	8-729-901-00	s	TRANSISTOR DTC124EK
Q10	8-729-901-00	s	TRANSISTOR DTC124EK
Q11	8-729-901-00	s	TRANSISTOR DTC124EK
Q12	8-729-901-00	s	TRANSISTOR DTC124EK
Q13	8-729-230-49	s	TRANSISTOR 2SC2712-YG

NOTE: For # marked in the parts list, refer to "SECTION 8 CHANGED PARTS".

(SV-147 BOARD)

Ref. No. or Q'ty	Part No.	SP	Description
Q14	8-729-017-58	s	TRANSISTOR 2SB1323
Q15	8-729-140-75	s	TRANSISTOR 2SD999
Q16	8-729-901-00	s	TRANSISTOR DTC124EK
#Q17	8-729-901-00	s	TRANSISTOR DTC124EK
#Q18	8-729-901-00	s	TRANSISTOR DTC124EK
R1	1-216-841-11	s	METAL, CHIP 47K 5% 1/16W
R2	1-218-736-11	s	METAL 68K 0.50% 1/16W
R3	1-218-736-11	s	METAL 68K 0.50% 1/16W
R4	1-216-635-11	s	METAL, CHIP 220 0.5% 1/10W
R5	1-216-635-11	s	METAL, CHIP 220 0.5% 1/10W
R6	1-216-853-11	s	METAL, CHIP 470K 5% 1/16W
R7	1-216-841-11	s	METAL, CHIP 47K 5% 1/16W
R8	1-218-716-11	s	METAL 10K 0.50% 1/16W
R9	1-218-700-11	s	METAL 2.2K 0.50% 1/16W
R10	1-216-651-11	s	METAL, CHIP 1K 0.5% 1/10W
R11	1-218-698-11	s	METAL, CHIP 1.8K 0.50% 1/16W
R12	1-218-845-11	s	METAL 820 0.50% 1/16W
R13	1-216-841-11	s	METAL, CHIP 47K 5% 1/16W
R14	1-216-651-11	s	METAL, CHIP 1K 0.5% 1/10W
R15	1-216-841-11	s	METAL, CHIP 47K 5% 1/16W
R16	1-218-716-11	s	METAL 10K 0.50% 1/16W
R17	1-216-793-11	s	METAL, CHIP 4.7 5% 1/16W
R18	1-216-793-11	s	METAL, CHIP 4.7 5% 1/16W
R19	1-216-793-11	s	METAL, CHIP 4.7 5% 1/16W
R20	1-216-651-11	s	METAL, CHIP 1K 0.5% 1/10W
R21	1-216-635-11	s	METAL, CHIP 220 0.5% 1/10W
R22	1-216-635-11	s	METAL, CHIP 220 0.5% 1/10W
R23	1-216-651-11	s	METAL, CHIP 1K 0.5% 1/10W
R24	1-216-651-11	s	METAL, CHIP 1K 0.5% 1/10W
R25	1-218-716-11	s	METAL 10K 0.50% 1/16W
R26	1-218-716-11	s	METAL 10K 0.50% 1/16W
R27	1-218-716-11	s	METAL 10K 0.50% 1/16W
R28	1-218-716-11	s	METAL 10K 0.50% 1/16W
R29	1-216-635-11	s	METAL, CHIP 220 0.5% 1/10W
R30	1-218-716-11	s	METAL 10K 0.50% 1/16W
R31	1-218-716-11	s	METAL 10K 0.50% 1/16W
R32	1-216-635-11	s	METAL, CHIP 220 0.5% 1/10W
R33	1-216-635-11	s	METAL, CHIP 220 0.5% 1/10W
R34	1-216-635-11	s	METAL, CHIP 220 0.5% 1/10W
R35	1-216-857-11	s	METAL, CHIP 1M 5% 1/16W
R36	1-218-313-11	s	METAL, CHIP 560 1% 1/16W
R37	1-216-809-11	s	METAL, CHIP 100 5% 1/16W
R38	1-216-841-11	s	METAL, CHIP 47K 5% 1/16W
R39	1-216-841-11	s	METAL, CHIP 47K 5% 1/16W
R40	1-216-841-11	s	METAL, CHIP 47K 5% 1/16W
R41	1-216-841-11	s	METAL, CHIP 47K 5% 1/16W
R42	1-216-841-11	s	METAL, CHIP 47K 5% 1/16W
R43	1-216-841-11	s	METAL, CHIP 47K 5% 1/16W
R44	1-216-841-11	s	METAL, CHIP 47K 5% 1/16W
R45	1-216-841-11	s	METAL, CHIP 47K 5% 1/16W
R46	1-216-841-11	s	METAL, CHIP 47K 5% 1/16W
R47	1-216-841-11	s	METAL, CHIP 47K 5% 1/16W
R48	1-216-841-11	s	METAL, CHIP 47K 5% 1/16W
R49	1-216-809-11	s	METAL, CHIP 100 5% 1/16W
R50	1-216-841-11	s	METAL, CHIP 47K 5% 1/16W
R51	1-218-736-11	s	METAL 68K 0.50% 1/16W
R52	1-218-716-11	s	METAL 10K 0.50% 1/16W
R53	1-216-841-11	s	METAL, CHIP 47K 5% 1/16W
R54	1-216-829-11	s	METAL, CHIP 4.7K 5% 1/16W

NOTE: Please see page 7-10 for the parts that are not listed in the parts list.

(SV-147 BOARD)

Ref. No. or Q'ty	Part No.	SP	Description
R55	1-218-716-11	s	METAL 10K 0.50% 1/16W
R56	1-218-706-11	s	METAL, CHIP 3.9K 0.50% 1/16W
R57	1-218-716-11	s	METAL 10K 0.50% 1/16W
R58	1-216-829-11	s	METAL, CHIP 4.7K 5% 1/16W
R59	1-216-841-11	s	METAL, CHIP 47K 5% 1/16W
R60	1-218-700-11	s	METAL 2.2K 0.50% 1/16W
R61	1-218-736-11	s	METAL 68K 0.50% 1/16W
R62	1-218-700-11	s	METAL 2.2K 0.50% 1/16W
R63	1-218-700-11	s	METAL 2.2K 0.50% 1/16W
R64	1-218-716-11	s	METAL 10K 0.50% 1/16W
R65	1-218-716-11	s	METAL 10K 0.50% 1/16W
R66	1-216-841-11	s	METAL, CHIP 47K 5% 1/16W
R67	1-216-841-11	s	METAL, CHIP 47K 5% 1/16W
R68	1-218-698-11	s	METAL, CHIP 1.8K 0.50% 1/16W
R69	1-216-841-11	s	METAL, CHIP 47K 5% 1/16W
R70	1-216-841-11	s	METAL, CHIP 47K 5% 1/16W
R71	1-218-716-11	s	METAL 10K 0.50% 1/16W
R72	1-216-809-11	s	METAL, CHIP 100 5% 1/16W
R73	1-218-744-11	s	METAL 150K 0.50% 1/16W
R74	1-216-809-11	s	METAL, CHIP 100 5% 1/16W
R75	1-218-867-11	s	METAL 6.8K 0.50% 1/16W
R76	1-218-867-11	s	METAL 6.8K 0.50% 1/16W
R77	1-218-724-11	s	METAL 22K 0.50% 1/16W
R78	1-218-724-11	s	METAL 22K 0.50% 1/16W
R79	1-216-635-11	s	METAL, CHIP 220 0.5% 1/10W
R80	1-216-809-11	s	METAL, CHIP 100 5% 1/16W
R81	1-216-841-11	s	METAL, CHIP 47K 5% 1/16W
R82	1-216-841-11	s	METAL, CHIP 47K 5% 1/16W
R83	1-216-841-11	s	METAL, CHIP 47K 5% 1/16W
R84	1-216-841-11	s	METAL, CHIP 47K 5% 1/16W
R85	1-216-841-11	s	METAL, CHIP 47K 5% 1/16W
R86	1-216-841-11	s	METAL, CHIP 47K 5% 1/16W
R87	1-216-841-11	s	METAL, CHIP 47K 5% 1/16W
R88	1-215-907-11	s	METAL 22 5% 3W
R89	1-216-841-11	s	METAL, CHIP 47K 5% 1/16W
#R90	1-216-837-11	s	METAL, CHIP 22K 5% 1/16W
S1	1-570-598-11	s	SWITCH, DIP 4-CKT
X1	1-579-962-21	s	CRYSTAL 22.5792MHz

[DUS-736 BOARD]
Up to Serial No. J:10110, UC:20055, EK:50235

C64	1-162-968-11	s	CERAMIC, CHIP 0.0047uF 10% 50V
C65	1-135-259-11	s	TANTALUM, CHIP 10 20% 6.3V
Q17	8-729-901-00	s	TRANSISTOR DTC124EK
Q18	8-729-901-00	s	TRANSISTOR DTC124EK
R90	1-216-837-11	s	METAL, CHIP 22K 5% 1/16W

NOTE: For # marked in the parts list, refer to "SECTION 8 CHANGED PARTS".

TENREGI BOARD

Ref. No. or Q'ty	Part No.	SP	Description
1pc	1-648-982-11	o	PRINTED CIRCUIT BOARD, TENREGI
D1	8-719-821-03	s	ELEMENT, HALL THS117

VR-154 BOARD

Ref. No. or Q'ty	Part No.	SP	Description
1pc	1-650-078-11	o	PRINTED CIRCUIT BOARD, VR-154
S1	1-467-523-11	s	ENCODER, ROTARY

VR-181 BOARD

Ref. No. or Q'ty	Part No.	SP	Description
1pc	1-650-079-11	o	PRINTED CIRCUIT BOARD, VR-181
S1	1-467-523-11	s	ENCODER, ROTARY

FRAME

Ref. No. or Q'ty	Part No.	SP	Description
1pc	⚠ 1-251-148-11	s	INLET, AC (3P)
1pc	⚠ 1-413-647-11	s	SWITCHING REGULATOR
1pc	1-466-954-11	s	DISPLAY UNIT, EL
1pc	1-466-955-11	s	ENCODER, ROTARY
1pc	1-467-524-11	o	KEY BOARD UNIT
4pcs	1-500-082-11	s	FILTER, CLAMP (FERRITE CORE)
1pc	1-532-827-11	s	FUSE (MT4-3A-N1)
1pc	1-543-793-11	s	FILTER, CLAMP (FERRITE CORE)
1pc	1-544-578-11	s	SPEAKER
2pcs	⚠ 1-560-764-21	o	CONTACT, FEMALE AWG18-24
1pc	⚠ 1-562-817-11	o	HOUSING, CONNECTOR 2P
2pcs	⚠ 1-565-787-21	o	CONTACT, RECEPTACLE 1P
1pc	1-570-028-11	s	SWITCH, MICRO
1pc	⚠ 1-570-455-11	s	SWITCH, AC POWER SEESAW
1pc	1-698-239-11	s	MOTOR, DC FAN
1pc	1-952-582-11	o	HARNESS, SUB (EL)

7-4. ACCESSORIES SUPPLIED

Ref. No. or Q'ty	Part No.	SP	Description
1pc	⚠ 1-534-754-00	s	CORD, POWER (For J)
1pc	⚠ 1-551-812-11	s	CORD, POWER (For UC)
1pc	⚠ 1-590-910-11	s	CORD, SET POWER (For EK)

NOTE: Please see page 7-10 for the parts that are not listed in the parts list.

NOTE: For # marked in the parts list, refer to "SECTION 8 CHANGED PARTS".

SECTION 8
CHANGED PARTS

NOTE: The numbers identified by marking with) are matching with each serial numbers.

310) Serial No. 10066 and higher (For J)
Serial No. 20026 and higher (For UC)
Serial No. 50111 and higher (For EK)

311) Serial No. 10081 and higher (For J)
Serial No. 20036 and higher (For UC)
Serial No. 50156 and higher (For EK)

401) Serial No. 10111 and higher (For J)
Serial No. 20056 and higher (For UC)
Serial No. 50236 and higher (For EK)

ADA-31 BOARD

Ref.No. or Q'ty	Parts No.	SP	Description
OLD) C101	1-164-085-00	s	CERAMIC 0.001uF 10% 50V
401) C101	1-163-275-11	s	CERAMIC, CHIP 0.001uF 5% 50V
OLD) C104	1-163-251-11	s	CERAMIC, CHIP 100pF 5% 50V
401) -	DELETED		
OLD) C105	1-164-085-00	s	CERAMIC 0.001uF 10% 50V
401) C105	1-163-275-11	s	CERAMIC, CHIP 0.001uF 5% 50V
OLD) C107	1-163-239-11	s	CERAMIC, CHIP 33pF 5% 50V
401) -	DELETED		
OLD) C201	1-164-085-00	s	CERAMIC 0.001uF 10% 50V
401) C201	1-163-275-11	s	CERAMIC, CHIP 0.001uF 5% 50V
OLD) C204	1-163-251-11	s	CERAMIC, CHIP 100pF 5% 50V
401) -	DELETED		
OLD) C205	1-164-085-00	s	CERAMIC 0.001uF 10% 50V
401) C205	1-163-275-11	s	CERAMIC, CHIP 0.001uF 5% 50V
OLD) C207	1-163-239-11	s	CERAMIC, CHIP 33pF 5% 50V
401) -	DELETED		
OLD) C312	1-164-085-00	s	CERAMIC 0.001uF 10% 50V
401) C312	1-163-275-11	s	CERAMIC, CHIP 0.001uF 5% 50V
OLD) C412	1-164-085-00	s	CERAMIC 0.001uF 10% 50V
401) C412	1-163-275-11	s	CERAMIC, CHIP 0.001uF 5% 50V
OLD) C515	1-126-157-11	s	ELECT 10uF 20% 16V
401) C515	1-124-261-00	s	ELECT 10uF 20% 50V
OLD) -	NOT USED		
401) IC901	8-759-234-77	s	IC TC4S66F
OLD) -	NOT USED		
401) IC902	8-759-234-77	s	IC TC4S66F
OLD) -	NOT USED		
401) Q901	8-729-901-00	s	TRANSISTOR DTC124EK
OLD) -	NOT USED		
401) Q902	8-729-901-05	s	TRANSISTOR DTA124EK
OLD) R12	1-216-103-91	s	METAL, CHIP 180K 5% 1/10W
311) -	DELETED		
OLD) R13	1-216-071-00	s	METAL, CHIP 8.2K 5% 1/10W
311) R13	1-216-295-00	s	METAL, CHIP 0 5% 1/10W
401) -	DELETED		
OLD) R137	1-216-107-00	s	METAL, CHIP 270K 5% 1/10W
311) -	DELETED		

(ADA-31 BOARD)

Ref.No. or Q'ty	Parts No.	SP	Description
OLD) R144	1-216-121-00	s	METAL, CHIP 1.0M 5% 1/10W
311) R144	1-216-113-00	s	METAL, CHIP 470K 5% 1/10W
OLD) -	NOT USED		
401) R146	1-216-121-00	s	METAL, CHIP 1.0M 5% 1/10W
OLD) -	NOT USED		
401) R153	1-216-097-00	s	METAL, CHIP 100K 5% 1/10W
OLD) R237	1-216-107-00	s	METAL, CHIP 270K 5% 1/10W
311) -	DELETED		
OLD) R244	1-216-121-00	s	METAL, CHIP 1.0M 5% 1/10W
311) R244	1-216-113-00	s	METAL, CHIP 470K 5% 1/10W
OLD) -	NOT USED		
401) R246	1-216-121-00	s	METAL, CHIP 1.0M 5% 1/10W
OLD) -	NOT USED		
401) R253	1-216-097-00	s	METAL, CHIP 100K 5% 1/10W
OLD) R414	1-216-077-00	s	METAL, CHIP 15K 5% 1/10W
401) R414	1-216-073-00	s	METAL, CHIP 10K 5% 1/10W
OLD) R513	1-216-009-00	s	METAL, CHIP 22 5% 1/10W
401) R513	1-216-025-00	s	METAL, CHIP 100 5% 1/10W
OLD) R514	1-216-009-00	s	METAL, CHIP 22 5% 1/10W
401) R514	1-216-025-00	s	METAL, CHIP 100 5% 1/10W
OLD) -	NOT USED		
401) R903	1-216-295-00	s	METAL, CHIP 0 5% 1/10W
OLD) -	NOT USED		
401) R904	1-216-295-00	s	METAL, CHIP 0 5% 1/10W
OLD) -	NOT USED		
401) R905	1-216-097-00	s	METAL, CHIP 100K 5% 1/10W
OLD) -	NOT USED		
401) RV901	1-241-628-11	s	RES, ADJ CARBON 2.2K
OLD) -	NOT USED		
401) RV902	1-241-628-11	s	RES, ADJ CARBON 2.2K

RF-53 BOARD

Ref.No. or Q'ty	Parts No.	SP	Description
OLD) C121	1-164-004-11	s	CERAMIC, CHIP 0.1uF 10% 25V
401) C121	1-135-259-11	s	TANTALUM, CHIP 10uF 20% 6.3V
OLD) C221	1-164-004-11	s	CERAMIC, CHIP 0.1uF 10% 25V
401) C221	1-135-259-11	s	TANTALUM, CHIP 10uF 20% 6.3V

SSP-8 BOARD

Ref.No. or Q'ty	Parts No.	SP	Description
OLD) C175	1-164-081-11	s	CERAMIC 470pF 10% 50V
401) C175	1-163-133-00	s	CERAMIC, CHIP 470pF 5% 50V
OLD) C176	1-164-081-11	s	CERAMIC 470pF 10% 50V
401) C176	1-163-133-00	s	CERAMIC, CHIP 470pF 5% 50V
OLD) C177	1-164-081-11	s	CERAMIC 470pF 10% 50V
401) C177	1-163-133-00	s	CERAMIC, CHIP 470pF 5% 50V
OLD) C178	1-164-081-11	s	CERAMIC 470pF 10% 50V
401) C178	1-163-133-00	s	CERAMIC, CHIP 470pF 5% 50V
OLD) C179	1-164-081-11	s	CERAMIC 470pF 10% 50V
401) C179	1-163-133-00	s	CERAMIC, CHIP 470pF 5% 50V
OLD) C180	1-164-081-11	s	CERAMIC 470pF 10% 50V
401) C180	1-163-133-00	s	CERAMIC, CHIP 470pF 5% 50V
OLD) C181	1-164-081-11	s	CERAMIC 470pF 10% 50V
401) C181	1-163-133-00	s	CERAMIC, CHIP 470pF 5% 50V
OLD) C182	1-164-081-11	s	CERAMIC 470pF 10% 50V
401) C182	1-163-133-00	s	CERAMIC, CHIP 470pF 5% 50V
OLD) C183	1-164-081-11	s	CERAMIC 470pF 10% 50V
401) C183	1-163-133-00	s	CERAMIC, CHIP 470pF 5% 50V
OLD) C184	1-164-081-11	s	CERAMIC 470pF 10% 50V
401) C184	1-163-133-00	s	CERAMIC, CHIP 470pF 5% 50V
OLD) C185	1-164-081-11	s	CERAMIC 470pF 10% 50V
401) C185	1-163-133-00	s	CERAMIC, CHIP 470pF 5% 50V
OLD) C729	1-163-038-00	s	CERAMIC, CHIP 0.1uF 25V
401) -	DELETED		
OLD) C765	1-164-096-11	s	CERAMIC 0.01uF 50V
401) C765	1-163-038-00	s	CERAMIC, CHIP 0.1uF 25V
OLD) C767	1-162-806-11	s	CERAMIC 0.1uF 10% 50V
401) C767	1-163-038-00	s	CERAMIC, CHIP 0.1uF 25V
OLD) C768	1-162-806-11	s	CERAMIC 0.1uF 10% 50V
401) C768	1-163-038-00	s	CERAMIC, CHIP 0.1uF 25V
OLD) C769	1-162-806-11	s	CERAMIC 0.1uF 10% 50V
401) C769	1-163-038-00	s	CERAMIC, CHIP 0.1uF 25V
OLD) C770	1-162-806-11	s	CERAMIC 0.1uF 10% 50V
401) C770	1-163-038-00	s	CERAMIC, CHIP 0.1uF 25V
OLD) -	NOT USED		
401) C771	1-163-038-00	s	CERAMIC, CHIP 0.1uF 25V
OLD) -	NOT USED		
401) C772	1-128-057-11	s	ELECT 330uF 20% 6.3V
OLD) -	NOT USED		
401) C773	1-163-038-00	s	CERAMIC, CHIP 0.1uF 25V

(SSP-8 BOARD)

Ref.No. or Q'ty	Parts No.	SP	Description
OLD) -	NOT USED		
401) C774	1-163-038-00	s	CERAMIC, CHIP 0.1uF 25V
OLD) -	NOT USED		
401) C775	1-163-038-00	s	CERAMIC, CHIP 0.1uF 25V
OLD) -	NOT USED		
401) C776	1-163-038-00	s	CERAMIC, CHIP 0.1uF 25V
OLD) -	NOT USED		
401) C777	1-163-038-00	s	CERAMIC, CHIP 0.1uF 25V
OLD) -	NOT USED		
401) C778	1-163-038-00	s	CERAMIC, CHIP 0.1uF 25V
OLD) -	NOT USED		
401) C935	1-163-038-00	s	CERAMIC, CHIP 0.1uF 25V
OLD) CNI112	1-251-103-11	o	SOCKET, IC 40P
310) CNI112	1-526-662-21	o	SOCKET, IC 40P
OLD) CNI307	1-251-103-11	o	SOCKET, IC 40P
310) CNI307	1-526-662-21	o	SOCKET, IC 40P
OLD) CNI509	1-251-103-11	o	SOCKET, IC 40P
310) CNI509	1-526-662-21	o	SOCKET, IC 40P
OLD) D705	8-719-911-19	s	DIODE 1SS119
401) D705	8-719-941-84	s	DIODE DA204UT106
OLD) D706	8-719-911-19	s	DIODE 1SS119
401) -	DELETED		
OLD) -	NOT USED		
401) FB702	1-412-694-11	s	INDUCTOR BEAD
OLD) IC710	8-759-926-77	s	IC SN74HC541ANS
401) -	DELETED		
OLD) IC733	8-759-038-46	s	IC SC7S00F
401) -	DELETED		
OLD) -	NOT USED		
401) IC735	8-759-925-90	s	IC SN74HC74ANS
OLD) -	NOT USED		
401) IC736	8-759-927-46	s	IC SN74HC00ANS
OLD) -	NOT USED		
401) IC737	8-759-925-90	s	IC SN74HC74ANS
OLD) -	NOT USED		
401) IC738	8-759-927-46	s	IC SN74HC00ANS
OLD) -	NOT USED		
401) IC739	8-759-927-46	s	IC SN74HC00ANS
OLD) -	NOT USED		
401) IC740	8-759-925-76	s	IC SN74HC08ANS
OLD) -	NOT USED		
401) IC914	8-759-279-59	s	IC EPM7032-WECTL
OLD) -	NOT USED		
401) L706	1-412-533-21	s	INDUCTOR 47uH
OLD) R713	1-216-009-00	s	METAL, CHIP 22 5% 1/10W
401) R713	1-216-025-00	s	METAL, CHIP 100 5% 1/10W
OLD) R718	1-216-009-00	s	METAL, CHIP 22 5% 1/10W
401) R718	1-216-025-00	s	METAL, CHIP 100 5% 1/10W
OLD) R725	1-216-009-00	s	METAL, CHIP 22 5% 1/10W
401) R725	1-216-025-00	s	METAL, CHIP 100 5% 1/10W

SV-147 BOARD

Ref.No. or Q'ty	Parts No.	SP	Description
OLD) -	NOT USED		
401) C64	1-162-968-11	s	CERAMIC, CHIP 0.0047uF 10% 50V
OLD) -	NOT USED		
401) C65	1-135-259-11	s	TANTALUM, CHIP 10 20% 6.3V
OLD) IC4	8-759-100-94	s	IC UPC358G2
311) IC4	8-759-251-48	s	IC UPC358GR-E1
OLD) IC16	8-759-100-94	s	IC UPC358G2
311) IC16	8-759-251-48	s	IC UPC358GR-E1
OLD) -	NOT USED		
401) Q17	8-729-901-00	s	TRANSISTOR DTC124EK
OLD) -	NOT USED		
401) Q18	8-729-901-00	s	TRANSISTOR DTC124EK
OLD) -	NOT USED		
401) R90	1-216-837-11	s	METAL, CHIP 22K 5% 1/16W